Original Paper

Molecular Neuropsychiatry

Mol Neuropsychiatry 2015;1:175–190
DOI: 10.1159/000438788

Received: February 16, 2015
Accepted: July 13, 2015
Published online: October 7, 2015

Copy Number Variations in DISC1 and DISC1-Interacting Partners in Major Mental Illness

Mandy Johnstone[a, b] Alan Maclean[a, b] Lien Heyrman[f, g] An-Sofie Lenaerts[f, g] Annelie Nordin[h] Lars-Göran Nilsson[i] Peter De Rijk[f, g] Dirk Goossens[f, g] Rolf Adolfsson[h] David M. St. Clair[c] Jeremy Hall[d] Stephen M. Lawrie[a] Andrew M. McIntosh[a] Jurgen Del-Favero[f, g] Douglas H.R. Blackwood[a, b] Benjamin S. Pickard[e]

[a]Division of Psychiatry, University of Edinburgh, Royal Edinburgh Hospital, and [b]Medical Genetics, Institute of Genetics and Molecular Medicine, University of Edinburgh, Edinburgh, [c]Institute of Medical Sciences, University of Aberdeen, Aberdeen, [d]Neurosciences & Mental Health Research Institute, Cardiff University School of Medicine, Cardiff, and [e]Strathclyde Institute of Pharmacy and Biomedical Sciences, University of Strathclyde, Glasgow, UK; [f]Applied Molecular Genomics Group, Department of Molecular Genetics, VIB, and [g]University of Antwerp, Antwerp, Belgium; [h]Department of Clinical Sciences, Psychiatry, Umeå University, Umeå, and [i]Department of Psychology, Stockholm University, Stockholm, Sweden

Key Words
Copy number variants · *DISC1* · *NDE1* · *NDEL1* · Schizophrenia · Affective disorder · Intellectual disability

Abstract
Robust statistical, genetic and functional evidence supports a role for *DISC1* in the aetiology of major mental illness. Furthermore, many of its protein-binding partners show evidence for involvement in the pathophysiology of a range of neurodevelopmental and psychiatric disorders. Copy number variants (CNVs) are suspected to play an important causal role in these disorders. In this study, CNV analysis of *DISC1* and its binding partners *PAFAH1B1*, *NDE1*, *NDEL1*, *FEZ1*, *MAP1A*, *CIT* and *PDE4B* in Scottish and Northern Swedish population-based samples was carried out using multiplex amplicon quantification. Here, we report the finding of rare CNVs in *DISC1*, *NDE1* (together with adjacent genes within the 16p13.11 duplication), *NDEL1* (including the overlapping *MYH10* gene) and *CIT*. Our findings provide further evidence for involvement of *DISC1* and its interaction partners in neuropsychiatric disorders and also for a role of structural variants in the aetiology of these devastating diseases.

© 2015 The Author(s)
Published by S. Karger AG, Basel

Introduction

Schizophrenia, schizoaffective disorder and bipolar disorder are phenotypically and genetically overlapping severe psychiatric disorders, cumulatively affecting approximately 3% of the population worldwide [1–4]. Like many other common diseases, they are complex and multifactorial, with contributions from multiple susceptibility genes and epigenetic, stochastic, and environmental

KARGER 125

E-Mail karger@karger.com
www.karger.com/mnp

© 2015 The Author(s)
Published by S. Karger AG, Basel
2296–9209/15/0013–0175$0/0

Karger Open access

This article is licensed under the Creative Commons Attribution 4.0 International License (CC BY) (http://www.karger.com/Services/OpenAccessLicense). Usage, derivative works and distribution are permitted provided that proper credit is given to the author and the original publisher.

Dr. Mandy Johnstone, BSc (Hons), MBChB, PhD, MRCPsych
Division of Psychiatry, University of Edinburgh
Royal Edinburgh Hospital, Morningside Terrace
Edinburgh EH10 5HF (UK)
E-Mail mandy.johnstone@ed.ac.uk

Downloaded by:
Cardiff University
131.251.254.32 - 6/22/2016 4:17:50 PM

factors [5]. Family, twin and adoption studies have shown that genetic factors play a major role in the development of schizophrenia [4], and also in mood disorders [6] which have estimated heritability values between 60 and 85%. The search for susceptibility genes has however been challenging, especially in mood disorders, where it has been hampered by clinical and genetic heterogeneity.

It has been shown in schizophrenia research that there is a spectrum of risk alleles from common, low penetrant forms such as single nucleotide polymorphisms (SNPs) identified from large genome-wide association studies (GWAS) to rarer, highly penetrant forms such as copy number variants (CNVs; segments of DNA with duplications and deletions) found at increased frequency in disease from a number of genome-wide CNV studies [7, 8]. Whilst the majority of mental illness at the population and individual level is likely to be caused by a combination of many risk alleles, there may be some forms of illness which are due to rarer variants that are themselves sufficient to cause illness in those individuals or families expressing them. Such variants can be biologically informative because they can be used to develop molecular, cellular and animal models of psychosis to help unravel the underlying disease mechanisms.

One such rare variant, first discovered in a Scottish cytogenetic study of juvenile delinquency, has been a balanced translocation from chromosome 11 into the long arm of chromosome 1. It was found to segregate with schizophrenia, bipolar disorder and major depression in other family members with major mental illness being found in roughly half of family members carrying the translocation (log of the odds ratio = 7.1) [9, 10]. Ten years later, the previously unknown gene Disrupted-In-Schizophrenia 1 *(DISC1)* on chromosome 1 was identified as disrupted by the translocation [11]. Since then, *DISC1* has attracted much attention, not only being associated with schizophrenia but also predisposing individuals to a wide range of major mental disorders, including bipolar disorder, major depression and autism spectrum disorders (ASD), in different populations [12–29]. In addition, association has been detected between *DISC1* alleles or haplotypes and measurable traits related to schizophrenia and bipolar disorder, including working memory [30–32], cognition [22, 25], reduced grey matter volume, brain activation [33] and abnormalities in hippocampal structure and function [21, 34]. By conditioning a previous GWAS study on *DISC1*, 8 genes *(LCT, CCDC141, TTN, CXCL3, KIAA1128, MED13L, MIR620* and *TMC07)* have been identified as associating with psychosis proneness, and these molecules predominantly link to the DISC1 pathway [35]. Through genetics, cell biology, animal modelling and neuroimaging, the DISC1 pathway is emerging as a pivotal mediator of quantitative and pathological brain dysfunction [36].

DISC1 expression in the brain is particularly high in the hippocampus during neurogenesis and remains high in the adult dentate gyrus, olfactory bulb and limbic regions [37, 38], and it appears that *DISC1* regulates important developmental processes such as neuronal migration, integration [39], synapse formation and neuronal stem cell maturation [38, 40–42]. DISC1 is thus critical for neurodevelopment and normal adult neuronal function. In addition, transgenic or mutant mice with impaired *DISC1* function show brain morphological changes, deficits in neural circuits, working memory impairment and behavioural traits related to schizophrenia and also bipolar disorder [43–49].

DISC1 acts as a large scaffold protein interacting with multiple protein partners [50–52], several of which have been shown to be important for cytoskeleton stability and modulation, intracellular transport, cAMP signalling, synaptic signal transduction and synaptic plasticity [53]. These DISC1 interactors are independent risk factors for major mental illness [54], making the DISC1 protein interaction network a potential target for future therapeutic intervention. Synaptic deficits and transcriptional dysregulation have recently been shown in induced pluripotent stem cell-derived forebrain neurons from patients with mutant DISC1 [55]. The so-called modelled 'DISC1 interactome' has been proposed to consist of 127 proteins and 158 interactions [52]. Sixty-seven of these proteins are direct DISC1 interactors and interestingly many of these DISC1 interactors also interact with one another, suggesting their involvement in common pathways, although the functional role of the majority of these potential interactors in neuronal development has yet to be shown in vivo [54]. Of these DISC1 interactors, we selected 7 that have a likely functional relation with psychiatric disorders based on evidence from the literature, namely platelet-activating factor acetylhydrolase 1b regulatory subunit 1 gene *(PAFAH1B1)*, Nuclear distribution factor E-homolog 1 gene *(NDE1)*, NDE-like 1 gene *(NDEL1)*, Fasciculation and Elongation Protein Zeta-1 gene *(FEZ1)*, Microtubule-associated Protein 1A gene *(MAP1A)*, CITRON gene *(CIT)* and cAMP-hydrolysing enzyme phosphodiesterase 4 gene *(PDE4B)*. Altogether, a substantial body of genetic and biological evidence supports a role for DISC1 and the 7 described interacting partners (summarised in table 1) in the development of psychiatric disorders.

Downloaded by:
Cardiff University
131.251.254.32 - 6/22/2016 4:17:50 PM

Table 1. Evidence supporting a role for the seven DISC1 interacting partners in the development of psychiatric disorders

DISC1 interactor	Expression and proposed function	Disease associations and animal models
PAFAH1B1	Encodes protein LIS1 which localizes to the centrosome and is a component of the microtubule-based dynein motor complex involved in neurogenesis and neuronal migration	Mutations in *PAFAH1B1* cause the neuronal migration disorder lissencephaly [68–70] Disruption of *PAFAH1B1* in animal models show cerebral cortex malformations [71, 72]
NDE1 and *NDEL1*	NDE1 and NDEL1 localize to the centrosome and are components of the microtubule-based dynein motor complex NDE1 is a cytoskeletal protein that participates in essential neurodevelopmental processes, including neuronal precursor proliferation and differentiation, neuronal migration, and neurite outgrowth [73] Phosphorylated NDE1 is present at the postsynaptic density, in proximal axons, within the nucleus, and at the centrosome where it becomes substantially enriched during mitosis. Mutation of the NDE1 phosphorylation site (T131) inhibits neurite outgrowth [74] Abundance of the NDEL1-DISC1 complex is highest during neuronal migration in the developing cortex [75] NDE1 and NDEL1 may compete with each other for DISC1 binding [76] *NDEL1* expression is reduced in brain tissue of patients with schizophrenia [39]	Mouse studies suggest that NDE1-mediated heterochromatin replication is critical for neuronal differentiation, and loss of NDE1 function may lead to genomic neurological disorders [77] Familial mutations in *NDE1* cause severe failure of neurogenesis and cortical lamination (microlissencephaly) [78, 79] *NDE1* associated with psychosis proneness in a large Finnish birth cohort upon re-analysis of GWAS linkage data conditioned on a *DISC1*-associating risk haplotype [35] Linkage found between *NDE1* and schizophrenia in families with individuals carrying *DISC1* risk alleles [73] – interaction between *NDE1* or *NDEL1* genotypes and *DISC1* genotypes are associated with schizophrenia [76] *NDE1* CNVs associate with a range of phenotypically different neurodevelopmental disorders including intellectual disability [80], ASD [81], attention deficit hyperactivity disorder [82], epilepsy [83] and schizophrenia [67, 80]
FEZ1	Anchors microtubules near the cell membrane and plays a role in axon bundling and axonal transport *FEZ1* expression pattern closely resembles that of *DISC1* and the DISC1/FEZ1 complex appears to be involved in neurite outgrowth [41] FEZ1 interacts with DISC1 to synergistically regulate dendritic growth of newborn neurons in the adult mouse hippocampus [84]	*FEZ1* mRNA expression is reduced in schizophrenia [85] Association between *FEZ1* and schizophrenia was found in a Japanese cohort [86] *FEZ1* knockout mice exhibit abnormal brain architecture, hyperactivity and enhanced responsiveness to psycho-stimulants [87] Epistatic interaction between *FEZ1* and *DISC1*-associated with risk of schizophrenia [84]
MAP1A	Controls microtubule polymerization and stabilization and is required for axon and dendrite development [88, 89]	Binds with post-synaptic density protein PSD-95 [90, 91] – essential for the correct membrane localization of multiple neurotransmitter receptors/synaptic proteins
CIT	CITRON (encoded by *CIT*) binds with post-synaptic density protein PSD-95 [90]	*CIT* has been shown to be associated with BP disorder [92]
PDE4B	Plays a role in intracellular signal transduction by degrading cAMP Dissociation of PDE4B from DISC1 inactivates its enzymatic activity PDE4B interacts with the LIS1/NDEL1/NDE1/DISC1 dynein motor complex at the centrosome and may play a role in regulating its structure and function [53] Mainly expressed in the cortex, hippocampus and striatum, brain regions implicated in memory and cognition	*PDE4B* was found to be disrupted by a translocation breakpoint in 2 related individuals with psychosis [93] Association has been found between SNPs in *PDE4B* and schizophrenia [94–96] Specific PDE4 inhibitor rolipram shown to facilitate long-term memory and to have antidepressant and antipsychotic activity [97, 98] *PDE4B* knockout mice show antidepressant-like behaviour and a proliferation of neuronal cells in the hippocampus [99, 100] Two *DISC1* missense mutations in mice, which result in depressed and schizophrenic phenotypes, are located within specific *PDE4B* binding sites [44]

Downloaded by:
Cardiff University
131.251.254.32 - 6/22/2016 4:17:50 PM

In GWAS performed for schizophrenia and bipolar disorder, no SNPs in *DISC1* or in any of its binding partners were found among the most significant results. Only a few SNPs with moderate significance were found, but there has been no consistency between different studies (catalogue of published GWAS: http://www.genome.gov/26525384) [56]. Current GWAS effectively capture the majority of common variants but not rare variants and structural variations, such as genomic rearrangements or CNVs, in the European population. This type of variation may contribute significantly to the inter-individual variation in susceptibility to diseases [57–60]. Genome-wide CNV studies have shown that rare CNVs are found at an increased frequency in patients with schizophrenia compared to control individuals [56, 61–67], constituting risk factors with low prevalence but high penetrance. Therefore, in this study we test the hypothesis that CNVs disrupting or encompassing *DISC1* or any of the 7 binding partners influence susceptibility to schizophrenia and bipolar disorder in the Scottish and Swedish populations and to major depressive disorder and intellectual disability (ID) in the Scottish population samples. Hereto, we used a technique named multiplex amplicon quantification (MAQ), which allows high-resolution CNV detection (kilobase range) at specific genomic regions, and thus covers small CNVs that are missed by many current genome-wide CNV detection platforms.

Subjects and Methods

Subjects

Scotland

The Scottish sample used in this study consists of a cohort of 1,293 unrelated cases [647 with schizophrenia, 213 with bipolar affective disorder, 192 with major depressive disorder and 241 with ID (ID, ID + schizophrenia and ID + 'comorbid'] and 352 unrelated controls. The study was approved by the Multi-Centre Research Ethics Committee for Scotland, and patients gave written informed consent for the collection of DNA samples for use in genetic studies. The sample comprised Caucasian individuals contacted through the inpatient and outpatient services of hospitals in North East (nearest city: Aberdeen) and South East (nearest city: Edinburgh) Scotland. For the South East Scotland samples, a diagnosis of schizophrenia was based on information from an interview with the patient using the Schedule for Affective Disorders and Schizophrenia-Lifetime version (SADS-L) supplemented by case note review and frequently by information from medical staff, relatives and caregivers. Patients with bipolar affective disorder and unipolar depression were also identified at the Royal Edinburgh Hospital and associated hospitals, and final diagnoses, based on DSM-IV-TR criteria [101], were reached by consensus between 2 trained psychiatrists and where possible using the Operational Criteria Checklist for Psychotic Illness (OPCRIT) [102]. Patients diagnosed with ID were over 18 years of age and recruited through the Learning Disability Services of South East Scotland. To be in this service, all patients were assessed to have an IQ <70. Within the National Health Service in the UK, psychiatrists are involved in the management of these patients regardless of whether or not they have a mental illness. We did not routinely reassess IQ in this study but relied on case note records as patients in the Learning Disability Services have previously had IQ assessments by clinical psychologists. Only ID patients with an IQ between 50 and 70 were included in this study. IQ assessment used Wechsler Intelligence Scale for Children (WISC) or Wechsler Adult Intelligence Scale (WAIS; most patients were part of the Learning Disabilities service since childhood). Most patients gave consent to take part in the study; however, if incapable of giving fully informed consent, a welfare guardian or nearest relative was approached to also give consent. Initial contact was through the responsible psychiatrist. Some patients were being treated for schizophrenia and major depression and some had no history of mental illness. Diagnoses according to DSM-IV criteria were reached using the semi-structured interview Psychiatric Assessment Schedule for Adults with a Developmental Disability (PAS-ADD 10) involving the patient and a key informant. Additional clinical information was obtained from hospital case note review. The Social Communication Questionnaire-Lifetime version (SCQ-L) provided a screen for autism, and high-scoring individuals were followed up using the Autism Diagnostic Instrument-Revised (ADI-R). Initial diagnoses were confirmed through consultation between the relevant specialist clinician involved and one of the research team members who was also a specialist in the psychiatry of ID (the late Prof. Walter Muir). Ethnically matched controls from the same region were recruited through the South of Scotland Blood Transfusion Service and from hospital staff. All controls were not directly screened to exclude those with a personal or family history of psychiatric illness; however, the Blood Transfusion Service does not accept blood donations from subjects taking regular medication or with a history of major illness. Of the North East Scotland samples, all participants self-identified as born in the British Isles (95% in Scotland), diagnosis was confirmed with the OPCRIT symptom checklist [102], and all cases met the DSM-IV and International Classification of Diseases 10th Edition (ICD-10) criteria for schizophrenia. Detailed medical and psychiatric histories were collected, and a clinical interview using Structured Clinical Interview for DSM-IV (SCID) was also performed on schizophrenia cases. Control samples were volunteers recruited through general practices in North East Scotland. Practice lists were screened for potentially suitable volunteers by age and sex and by exclusion of subjects with major mental illness or use of neuroleptic medication. Volunteers who replied to a written invitation were interviewed using a short questionnaire to exclude major mental illness in themselves and first-degree relatives.

Sweden

All participants were Caucasians and originated from a geographically isolated population living in the County of Västerbotten in Northern Sweden. Two large samples were used in this study from the Swedish population. One sample consists of 909 unrelated patients (410 schizophrenia, 120 schizoaffective disorder, 314 bipolar affective disorder) and 512 unrelated control individuals. The other sample comprises 152 related patients and 227 of their first-degree relatives, all members of a large 14-generation pedigree from Västerbotten County (table 2).

Downloaded by:
Cardiff University
131.251.254.32 - 6/22/2016 4:17:50 PM

Table 2. Prevalence of CNVs in the Scottish and Swedish unrelated patient and control groups

Group	DISC1		NDE1		NDEL1		CIT		Total Del, count (%)	Total Dup, count (%)	Total CNVs, count (%)
	Del	Dup	Del	Dup	Del	Dup	Del	Dup			
SCZ (Sc)	1/647	2/647	1/647	2/647	0/647	0/647	0/647	1/647	2 (0.31)	5 (0.77)	7 (1.08)
SCZ (Sw)	0/410	7/410	0/410	0/410	0/410	1/410	0/410	0/410	0	8 (1.95)	8 (1.95)
Total SCZ	1/1,057	9/1,057	1/1,057	2/1,057	0/1,057	1/1,057	0/1,057	1/1,057	2 (0.19)	13 (1.23)	15 (1.42)
Total SA (Sw)	0/120	0/120	0/120	1/120	0/120	0/120	0/120	0/120	0	0	0
BPD (Sc)	0/213	0/213	0/213	0/213	0/213	0/213	0/213	0/213	0	0	0
BPD (Sw)	0/314	6/314	0/314	0/314	0/314	0/314	0/314	0/314	0	6 (1.91)	6 (1.91)
Total BPD	0/527	6/527	0/527	0/527	0/527	0/527	0/527	0/527	0	6 (1.14)	6 (1.14)
Total MDD (Sc)	0/192	0/192	0/192	0/192	0/192	0/192	0/192	0/192	0	0	0
Total ID (Sc)	0/72	2/72	0/72	1/72	0/72	0/72	0/72	0/72	0	3 (4.17)	3 (4.17)
ID + SCZ (Sc)	0/92	0/92	0/92	1/92	0/92	0/92	0/92	0/92	0	1 (1.08)	1 (1.08)
ID + SCZ (Sw)	0/24	0/24	0/24	0/24	0/24	0/24	0/24	0/24	0	0	0
Total ID + SCZ	0/116	0/116	0/116	1/116	0/116	0/116	0/116	0/116	0	1 (0.86)	1 (0.86)
ID + comorbid (Sc)	0/77	0/77	0/77	1/77	0/77	0/77	0/77	0/77	0	1 (1.30)	1 (1.30)
ID + comorbid (Sw)	0/19	0/19	0/19	0/19	0/19	0/19	0/19	0/19	0	0	0
Total ID + comorbid	0/96	0/96	0/96	1/96	0/96	0/96	0/96	0/96	0	1 (1.04)	1 (1.04)
Control (Sc)	1/352	1/352	0/352	0/352	0/352	0/352	0/352	0/352	1 (0.28)	1 (0.28)	2 (0.57)
Control (Sw)	0/512	6/512	0/512	3/512	0/512	0/512	0/512	0/512	0	9 (1.76)	9 (1.76)
Total control	1/864	7/864	0/864	3/864	0/864	0/864	0/864	0/864	1 (0.16)	10 (1.16)	11 (1.27)

Of the 8 gene regions screened, CNVs (duplications and deletions) were found in *DISC1*, *NDE1*, *NDEL1* and *CIT* regions. No CNVs were found in *PAFAH1B1*, *FEZ1*, *MAP1A* or *PDE4B* in this study. SCZ = Schizophrenia; SA = schizoaffective disorder; BPD = bipolar disorder; MDD = major depressive disorder; Sc = Scottish; Sw = Swedish. Note: total ID + comorbid (Sc) – diagnoses with ID include BPD (n = 32), MDD (n = 26), autism (n = 17), Asperger's (n = 1) and Klinefelter's syndrome (n = 1); total ID + comorbid (Sw) – diagnoses with ID include schizoaffective disorder-bipolar type (n = 11), schizoaffective disorder-depressive type (n = 3), BPD (n = 2) and psychotic disorder not otherwise specified (n = 3). Shaded rows represent total values for Scottish and Swedish populations combined.

The unrelated patients were identified through the in-patient hospital registers in the region, and the ascertainment was carried out from 1992 to 2005. Diagnostic evaluation was performed by trained research nurses and research psychiatrists using register data, data from medical records, multiple informants, and, when deemed necessary and feasible, semi-structured interviews were used including MINI (Mini-International Neuropsychiatric Interview) [103], DIGS (The Diagnostic Interview for Genetic Studies) [104], FIGS (The Family Interview for Genetic Studies) [105] and SCAN (The Schedules for Clinical Assessment in Neuropsychiatry) [106]. The diagnoses were defined according to the DSM-IV criteria, and patients were included only if full consensus was reached by 2 research psychiatrists. To date, the patients have been followed-up for 3–13 years, giving ample opportunities for diagnostic validation and phenotypic characterization.

The 512 unrelated Swedish control individuals were recruited from the Betula study sample of 4,360 individuals representative of the general population of the region, described in detail elsewhere [107]. A prerequisite for inclusion in the Betula study was the ability to comply with a test battery consisting of a health examination, blood sample testing, interviews and self-rating scales about somatic and mental health, and an extensive examination of memory functions. For 9 Swedish control individuals carrying a CNV, in-depth clinical evaluation showed no signs of lifetime psychiatric disorders. The 152 probands of the nuclear families were initially identified through hospital registers, and the diagnostic work-up was similar to the procedure described for the unrelated cases. A detailed description of the pedigree has been previously published [108]. For the purpose of this study, we were not dependent on a final DSM-IV diagnosis (ongoing assessment) of all 227 first-degree relatives. Lifetime psychiatric disorders were evaluated in 13 first-degree relatives using a semi-structured interview based on the DIGS and FIGS. In these 13 individuals, 6 were CNV carriers and 7 were not but were a first-degree relative of a proband with a CNV. Of the 6 with a CNV, 3 had bipolar affective disorder and 3 were unaffected. Out of the 7 non-CNV carriers, 1 had bipolar disorder, 1 had schizoaffective disorder and 5 were unaffected (table 2). All subjects participated after giving written informed consent, and the study was approved by the regional Medical Ethics Committees of the Universities of Umeå and Antwerp. We also analysed the 30 HapMap trios of the CEU (Utah residents with ancestry from Northern and Western Europe) population. DNA of these 90 individuals was obtained from the Coriell Institute (Camden, N.J., USA).

Downloaded by:
Cardiff University
131.251.254.32 - 6/22/2016 4:17:50 PM

Multiplex Amplicon Quantification

Genomic DNA was extracted from peripheral blood using standard methods. To explore the 8 genes for CNVs, we used MAQ [109, 110]. It consists of a multiplex PCR amplification of several fluorescently labelled target and reference amplicons, followed by fragment analysis on an ABI 3730 DNA analyzer (Applied Biosystems). The comparison of normalised peak areas between patient and control individuals results in a dosage quotient (DQ) of the target amplicon. Seventy-nine target amplicons and 21 reference amplicons were amplified in three MAQ assays (online suppl. table SI; see www.karger.com/doi/10.1159/000438788 for all online suppl. material). These assays are available on request from Prof. Del-Favero (jurgen.delfavero@molgen-vib.ua.be). The MAQ reactions were performed on 20-ng genomic DNA. DQs were calculated using an in-house developed MAQ software package (MAQ-S; http://www.vibgeneticservicefacility.be/MAQ.htm). A DQ between 1.3 and 1.7 was considered indicative of a heterozygous duplication, a DQ between 0.3 and 0.7 indicative of a heterozygous deletion.

Allelic Quantification

To confirm the findings of the MAQ analysis in the Northern Swedish population samples, we used allelic quantification by genotyping SNPs in and around the duplicated amplicons using the Sequenom MassARRAY iPLEX Gold system (Sequenom, Germany). Individuals heterozygous for an SNP in a duplicated region show an allele ratio of 2:1 (relative allele frequencies 0.667:0.333) instead of the 1:1 ratio (relative allele frequencies 0.5:0.5) in a normal diploid genome. Relative quantification assays are run with the Typer Analyzer program (Typer 4.0, Sequenom) using Allelotyping mode. SNPs with the highest possible heterozygosity were selected from HapMap (www.hapmap.org) and genotyped in the individuals showing a duplication with MAQ. Primers for PCR amplification and extension primers (online suppl. table SII) were designed using the Assay Design 3.1 program (Sequenom). Genotyping of the SNPs was carried out following the protocol provided by Sequenom. Analysis and scoring were performed using the program Typer 4.0 (Sequenom).

The primer extension products of each allele are not always equally represented, so the expected relative allele frequencies when a duplication is present were calculated based on the mean relative frequency of allele A (f_A) and the mean relative frequency of allele B (f_B) obtained from analysis of individuals without a duplication in that specific region. Expected relative frequencies in a duplicated region would be $(2f_A/f_B)/[1 + (2f_A/f_B)]$ and $1 - (2f_A/f_B)/[1 + (2f_A/f_B)]$ for duplication of the A allele or $(f_A/2f_B)/[1 + (f_A/2f_B)]$ and $(f_A/2f_B)/[1 + (f_A/2f_B)]$ for duplication of the B allele.

Chromosomal Microarray

For several of the Scottish samples, CNVs initially found by MAQ assay were confirmed by microarray analysis using a CytoScan 750K Array (Affymetrix UK Ltd.). Microarray analysis was also used to genotype other family members. The test DNA was referenced against a normal control dataset using the Affymetrix Chromosome Analysis Suite (ChAS) and ArrayLIMs. Further details of the array designs are available at affymetrix.com.

Results

MAQ Analysis

We explored *DISC1, PAFAH1B1*, *NDE1*, *NDEL1*, *FEZ1*, *MAP1A*, *CIT* and *PDE4B* for whole or partial gene deletions or duplications in the Scottish and Northern Swedish samples. In the unrelated Scottish population-based sample set, we screened 647 patients with a diagnosis of schizophrenia, 213 patients with bipolar disorder, 192 patients with major depressive disorder, 72 patients with ID, 92 patients with ID and comorbid schizophrenia, 77 patients with ID and a comorbid other psychiatric diagnosis including: 32 with bipolar affective disorder, 26 with major depressive disorder, 17 with autism, 1 with Asperger's syndrome and 1 with Klinefelter's syndrome. The analysis also included screening 352 unrelated control individuals from the Scottish population (table 2). The unrelated Swedish population-based samples included 410 patients with a diagnosis of schizophrenia, 120 patients with schizoaffective disorder, 314 patients with bipolar disorder, 24 with ID and comorbid schizophrenia, and 19 with ID plus another comorbid psychiatric diagnosis including: 11 with schizoaffective disorder bipolar type, 3 with schizoaffective disorder depressive type, 2 with bipolar affective disorder and 2 with psychotic disorder not otherwise specified (table 2). This Swedish population-based sample analysis included screening 512 unrelated control individuals. Within the Swedish sample analysis, we also screened 152 related probands from a large pedigree as well as 227 first-degree relatives of these patients from an isolated Northern Swedish population (table 3). Ninety Swedish HapMap CEU individuals were also analysed in this study. We used the accurate high-throughput MAQ method to detect whole or partial gene deletions or duplications, quantitatively amplifying several target amplicons per gene (fig. 1; online suppl. table SI). Fifty-seven target amplicons in and around the 8 genes ('amp', fig. 1) and 21 reference amplicons were analysed in a first screen (online suppl. table SI).

DISC1 Copy Number Variants

In both the Scottish and Swedish unrelated samples, we detected CNVs in *DISC1* (table 2). In the Scottish samples, we detected one affected individual with a deletion of at least 48 kb with a minimal region of 229,904,902–229,952,723 (coordinates based on UCSC build 36) encoding intron 3 and 3 alternate exons of *DISC1* (chromosome 1q42.2). This particular deletion was found only in this one Scottish male patient with a diagnosis of schizophrenia (1/647 = 0.15% in Scottish schizophrenia samples

Downloaded by:
Cardiff University
131.251.254.32 - 6/22/2016 4:17:50 PM

Table 3. Prevalence of CNVs in related probands and first-degree relatives of the pedigree from the County of Västerbotten in Northern Sweden

Group	Diagnosis	n (M:F)	First-degree relatives, n	Nuclear families, n	Mean age at onset, years	Carriers of a duplication in:		
						DISC1, n %	NDE1, n %	NDEL1, n %
Related probands (152 in total)	SCZ	27 (18:9)	26	11	23.2±6.6	2 (7.41)	0	0
	SCZ + ID	2 (1:1)	3	2	28.5±3.5	0	0	0
	SCA	21 (13:8)	23	9	21.6±7.9	0	1 (4.76)	0
	SCA + ID	1 (0:1)	0	0	15	0	0	0
	BPD1	49 (22:27)	73	35	28.2±14.0	2 (4.08)	0	0
	BPD1 + ID + autism	1 (0:1)	2	1	23	0	0	0
	BPD2	49 (17:32)	95	37	30.5±16.8	1 (2.04)	0	0
	BPD2 + autism	1 (1:0)	3	1	20	0	0	0
	BPD NOS	1 (0:1)	1	1	42	0	0	0
First-degree relatives[a] (227 in total)	Total sample	227 (85:142)	n.a.	98	n.a.	6 (2.64)	0	0
	BPD1	2 (0:2)	n.a.	n.a.	25.5±4.9	1	0	0
	BPD2	1 (0:1)	n.a.	n.a.	14	1	0	0
	BPD NOS	1 (0:1)	n.a.	n.a.	65	1	0	0
	SCA (bipolar type)	1 (0:1)	n.a.	n.a.	14	0	0	0
	Unaffected	8 (4:4)	n.a.	n.a.	n.a.	3	0	0

Duplications were found only in DISC1, NDE1 and NDEL1. SCZ = Schizophrenia; SCA = schizoaffective disorder; BPD = bipolar disorder; NOS = not otherwise specified; n.a. = not applicable. [a] Diagnostic information is shown in 13 out of 227 first-degree relatives; 6 carrying a CNV; 7 not carrying a CNV but are first-degree relatives of a proband with a CNV. Of the 6 with a CNV, 3 had BPD and 3 were unaffected. Out of the 7 non-CNV carriers, 1 had BPD, 1 had SCA and 5 were unaffected.

or 1/1,057 = 0.09% combining both Scottish and Swedish schizophrenia samples) and was not found in any other of the Scottish or Swedish affected samples or in any of the Scottish or Swedish controls (table 2). We found an unaffected Scottish individual who had a large deletion of at least 192 kb encoding the *TSNAX* and the *TSNAX-DISC1* boundary region. However, the deletion in this control individual spans from 229,622,813 to 229,814,916, which is further upstream from the start of the *DISC1* deletion found in the patient with schizophrenia (table 4).

In contrast to *DISC1* deletions, *DISC1* duplications were found to be more abundant in both the Scottish and Swedish population-based samples. Duplications of exon 1 of *DISC1* were found in 5 individuals in the Scottish samples: in 2 patients with schizophrenia (2/647; 0.93%), 2 patients with ID (2/72; 2.78%) and in 1 control sample (1/352; 0.28%). In the unrelated Swedish population-based samples (table 2), duplications in *DISC1* were found in 7 patients with schizophrenia (7/410; 1.7%), 5 with bipolar type 1 disorder and 1 with bipolar type 2 disorder (6/314; 1.9%) and 6 control individuals (6/512; 1.2%). In the related Swedish samples (table 3), a *DISC1* duplication was detected in 2 patients with schizophrenia (2/27; 7.4%), 3 with bipolar type 1, 2 with bipolar type 2 and 1 with bipolar not otherwise specified patient (6/102; 5.8%) and in 3 unaffected relatives. On further analysis of the pedigrees of the nuclear families, the CNV did not segregate with psychiatric disease in these Swedish samples: for the affected carriers as well as for the unaffected carriers, both affected and unaffected non-carrying first-degree relatives were found. An extra 22 target amplicons in this genomic region were subsequently analysed for fine mapping of the samples ('newamp', fig. 1; online suppl. table SI). The duplication in *DISC1* in the Swedish samples has a maximum size of 107.4 kb and a minimum size of 98.8 kb and encompasses the first exon of *DISC1* (fig. 1). The *DISC1* duplication in the Scottish samples also encompasses the first exon of DISC1 and has a maximum size of 52 kb and a minimum size of 1.9 kb (table 4). In the Database of Genomic Variants (DGV; http://dgv.tcag.cag, update October 2014), 5 CNVs are reported at this genomic location: variation 3334, variation 48275, variation 48276, variation 30458 and variation 2350. Variations 30458 and 2350 (fig. 1) were detected in two HapMap CEU individuals, NA11830 (mother) and NA10856 (her son) [111, 112]. We analysed the 90 HapMap CEU individuals with MAQ and allelic quantification assays and also detected the *DISC1* duplication in NA11830 and

Downloaded by:
Cardiff University
131.251.254.32 - 6/22/2016 4:17:50 PM

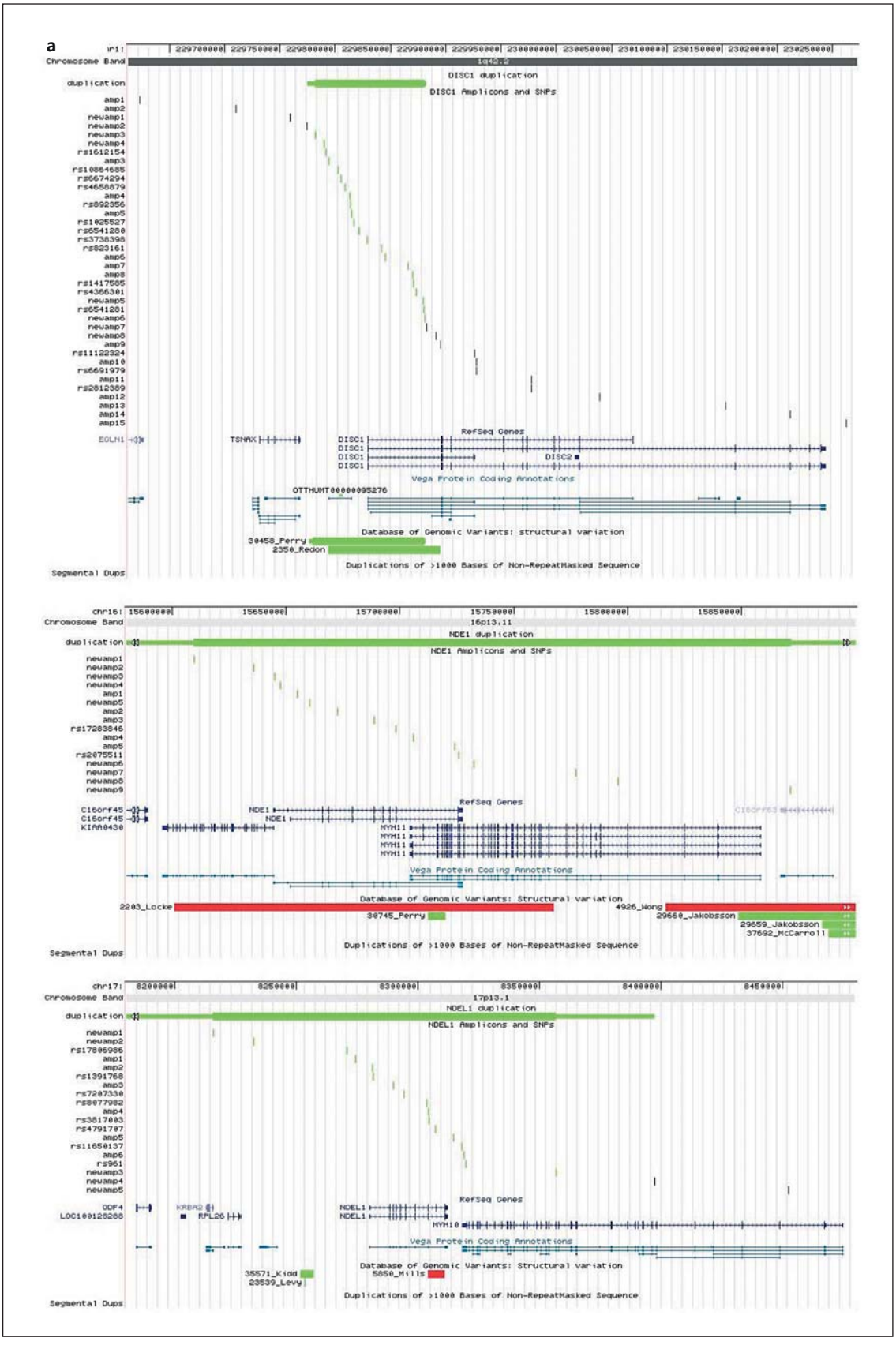

1

(For legend see next page.)

Downloaded by:
Cardiff University
131.251.254.32 - 6/22/2016 4:17:50 PM

NA10856, suggesting that these 'three' duplications are in fact one recurrent duplication. With a frequency of about 1.5%, this duplication is a common variant in the Northern Swedish population. This might be a result of genetic drift in an isolated population, but the duplication may be a common variant in the general (Caucasian/European) population, supported by its detection in 2 (related) HapMap CEU individuals. In the Northern Swedish population-based sample, the partial *DISC1* duplication is not associated with schizophrenia (χ^2 p value = 0.70), bipolar disorder (χ^2 p value = 0.44) or with both disorders together (χ^2 p value = 0.53). In addition, in the nuclear families, both affected and unaffected duplication carriers were found with both affected and unaffected first-degree relatives not carrying the duplication. So the partial *DISC1* duplication is most likely not related to the disease phenotypes under study. Interestingly, in one Northern Swedish schizophrenia patient, 4 copies of the *DISC1* CNV were found (4 copies in total, i.e. 2 normal copies and 2 additional). DNA from the parents was not available for typing. It is possible that the extra copy present in this patient does disturb DISC1 expression or protein function. Another interesting observation is that the duplication also covers a novel processed transcript (OTTHUMT00000095276, Vega gene ID RP11-17H4.2, fig. 1). This 'gene' has no open reading frame, and the

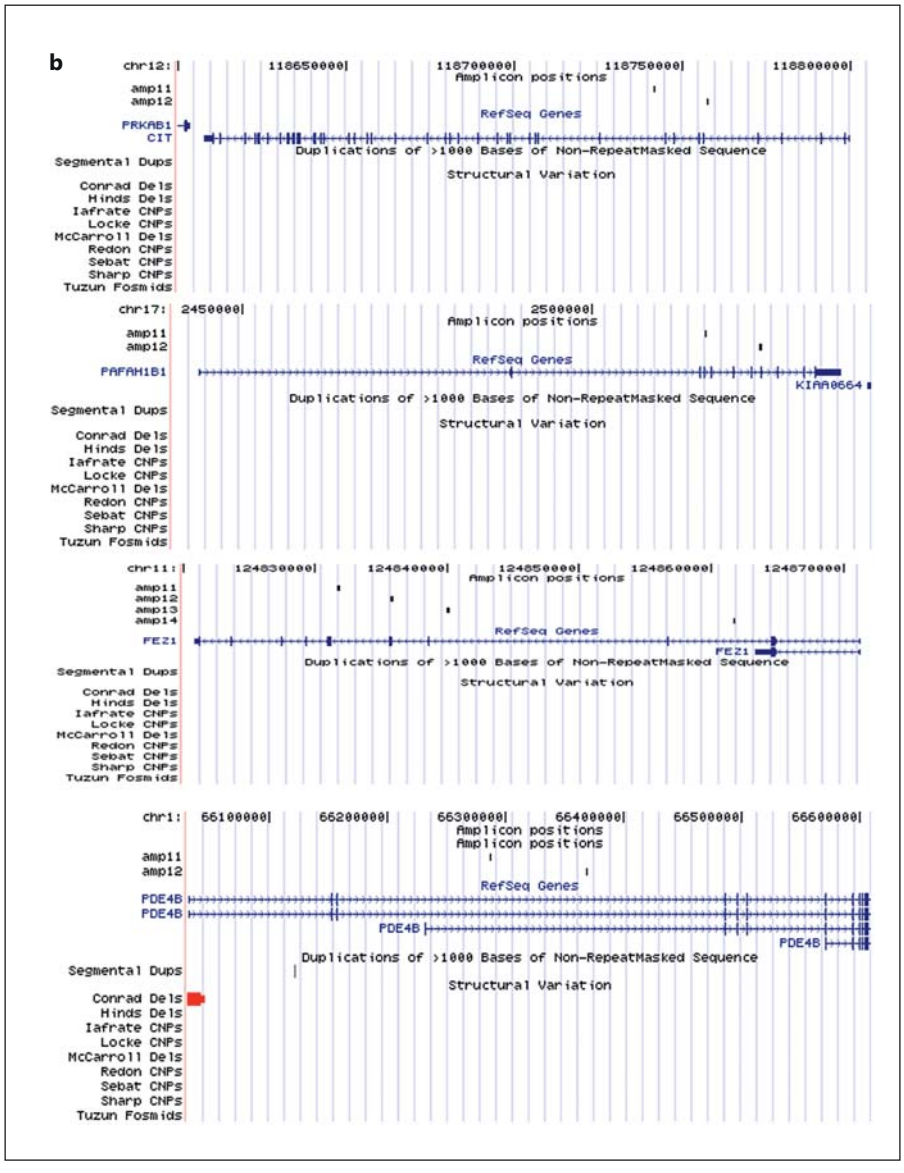

Fig. 1. Location of the quantitatively typed MAQ amplicons and SNPs with reference to the investigated and other known genes and to structural variants in the Database of Genomic Variants. Duplications are drawn in green, deletions in red and CNVs with unknown direction in orange colour. **a** Detected duplications in 3 genes: *DISC1*, *NDE1* and *NDEL1*. The minimum size is indicated with a thick bar, the maximal size with a thin bar and undefined boundaries are indicated with arrows. **b** Other genomic regions investigated included *CIT*, *PAFAH1B*, *FEZ1* and *PDE4B*. The figure was made by adding custom tracks to the UCSC Genome Browser (http://genome.ucsc.edu/cgi-bin/hgGateway).

Downloaded by:
Cardiff University
131.251.254.32 - 6/22/2016 4:17:50 PM

Table 4. Details on the individual CNV carriers that were identified in the Scottish samples

ID	CNV/ cytoband	Minimal region	Size, kb	Genes	Diagnosis	Origin	Sex	AAS/ AAO	Additional information
Sc11052	Dup 1q42.2	229,828,419 – 229,830,272	1.9	exon 1 *DISC1*	SCZ	Sc	M	36/28	
Sc7401	Del 1q42.2	229,904,902 – 229,952,723	48	intron 3 and 3 alternate exons *DISC1*	SCZ	Sc	M	24/23	
Sc11532	Dup 1q42.2	229,814,616 – 229,845,359	30	exon 1 *DISC1*	SCZ	Sc	M	34/19	
Sc7473	Dup 1q42.2	229,828,419 – 229,830,272	1.9	exon 1 *DISC1*	ID	Sc	F	76/16	mild ID
Sc7473	Dup 1q42.2	229,814,616 – 229,845,359	30	exon 1 *DISC1*	ID	Sc	F	76/16	two DISC1 duplications were detected in this patient
Sc11986	Dup 1q42.2	229,793,461 – 229,845,359	52	exon 1 *DISC1*	control	Sc	F	59/–	
Sc11293	Del 1q42.2	229,622,813 – 229,814,916	192	*TSNAX/TSNAX-DISC1*	control	Sc	M	53/–	
Sc11120	Del 16p13.11	15,654,809 – 15,723,967	69	middle *NDE1*/end *MYH11* overlap	SCZ	Sc	M	30/17	
Sc11034	Dup 16p13.11	15,654,809 – 15,723,967	69	middle *NDE1*/end *MYH11* overlap	SCZ	Sc	M	49/14	
Sc6638	Dup 16p13.11	15,654,809 – 15,723,967	69	middle *NDE1*/end *MYH11* overlap	SCZ	Sc	F	39/37	
Sc7292	Dup 16p13.11	15,654,809 – 15,723,967	69	middle *NDE1*/end *MYH11* overlap	SCZ + ID	Sc	M	27/21	confirmed in GWAS
Sc7474	Dup 16p13.11	15,654,809 – 15,723,967	69	middle *NDE1*/end *MYH11* overlap	ID	Sc	M	43/12	
Sc7615	Dup 16p13.11	15,654,809 – 15,723,967	69	middle *NDE1*/end *MYH11* overlap	SCZ + ID + ASD	Sc	M	18/14	confirmed in GWAS
Sc11553	Dup 12q24.23	118,741,727 – 118,757,944	16	exons 6 – 9 *CIT*	SCZ	Sc	F	57/18	

Coordinates are according to UCSC build 36 (hg18). Size is minimal CNV size. AAS = Age at sampling; AAO = age at onset; SCZ = schizophrenia; BPD = bipolar disorder; MDD = major depressive disorder; Sc = Scottish; Sw = Swedish.

function of the RNA transcript is yet unknown, but it might be implicated in the regulation of expression of (a) protein coding gene(s). Four functional copies of this DNA sequence might lead to a disturbingly elevated level of this non-coding RNA and interfere with its normal regulatory function.

NDE1 Copy Number Variants

CNVs were detected in *NDE1* in both the Scottish and Swedish sample sets (table 2). A deletion in *NDE1* was detected by MAQ assay in one Scottish patient with a diagnosis of schizophrenia (1/647; 0.15%) and was not found in any other samples analysed in this study. Within the Scottish samples, we also found *NDE1* duplications in 5 patient samples but in no Scottish controls (tables 2 and 4). Two of the Scottish patients with *NDE1* duplications have a diagnosis of schizophrenia (Sc11034 and Sc6638), one has a diagnosis of ID and schizophrenia (Sc7292), one has a diagnosis of ID alone (Sc7474) and one patient Sc7615 has diagnoses of ID, autism and schizophrenia (table 4). The *NDE1* duplications in 2 of the patients (Sc7292 and Sc7615) were also independently confirmed from GWAS, as they had been included in that analysis. Blood samples were subsequently obtained from the parents and all 4 siblings of Sc7615 and screened by microarray analysis using the Affymetrix CytoScan 750K array. This shows a single copy gain of the short arm of chromosome 16 at band p13.11. The duplication is approximately 1.65 Mb in size spanning 14,892,975–16,544,033 (NCBI Build 37). This 16p13.11 duplication was found to be maternally inherited and also present in two other siblings of Sc7615, one of whom has a history of psychosis (fig. 2). The mother of Sc7615 has a strong family history of schizophrenia and affective disorders. In the Swedish population sample, the duplication was detected in 1 patient with a diagnosis of schizoaffective disorder, bipolar type (1/120; 0.83%) and 3 control individuals (3/512; 0.59%) from the population-based sample, and in 1 patient with schizoaffective disorder, bipolar type from the related patients and relatives sample set (table 3). Fisher's exact test for these Swedish case-control studies results in non-significant p values of 0.27, 0.13 and 0.33, respectively. However, we believe that statistical analysis of the results of individual regions is not appropriate given how rare these CNVs are. In order to generate adequate statistical power, we would have to screen far larger sample sets than what was available. For these Swedish patients, no first-degree relative samples were available for testing, so segregation could not be verified. The duplication has a minimum size of 262 kb and encompasses *NDE1* and other genes; the exact 3′ and 5′ boundaries are undefined (fig. 1).

NDEL1 Copy Number Variants

A duplication in *NDEL1* was found in 1 patient with a diagnosis of schizophrenia in the Swedish samples (1/410; 0.24%) but not found in any Scottish samples or in any Scottish or Swedish control individuals. It encompasses the whole gene and has a minimum size of 141.3 kb (fig. 1). The 5′ boundary is undefined; at the 3′ side, the duplication maximally extends 85 kb past exon 9.

Downloaded by:
Cardiff University
131.251.254.32 - 6/22/2016 4:17:50 PM

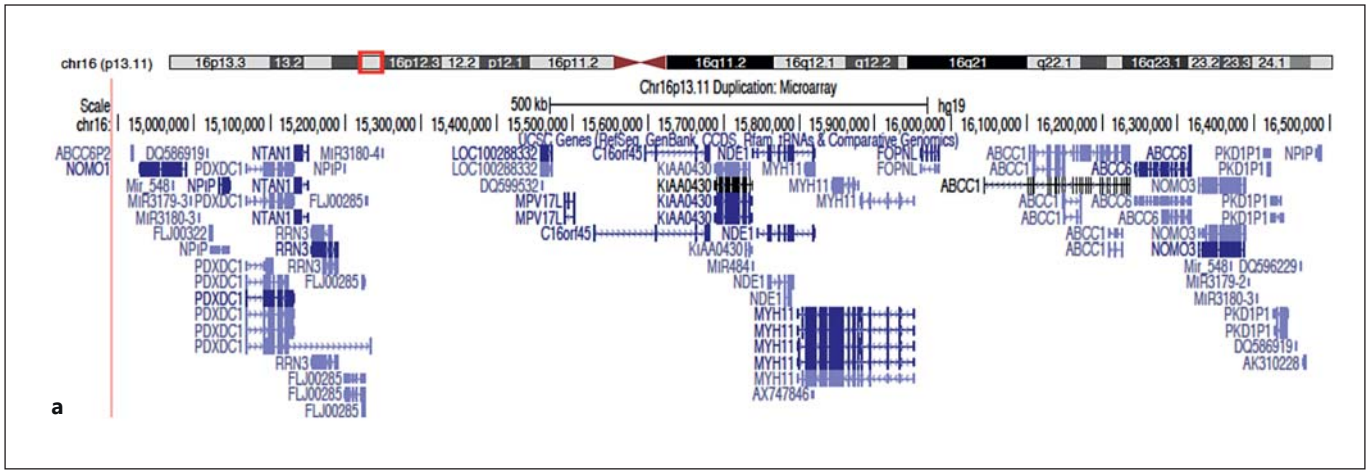

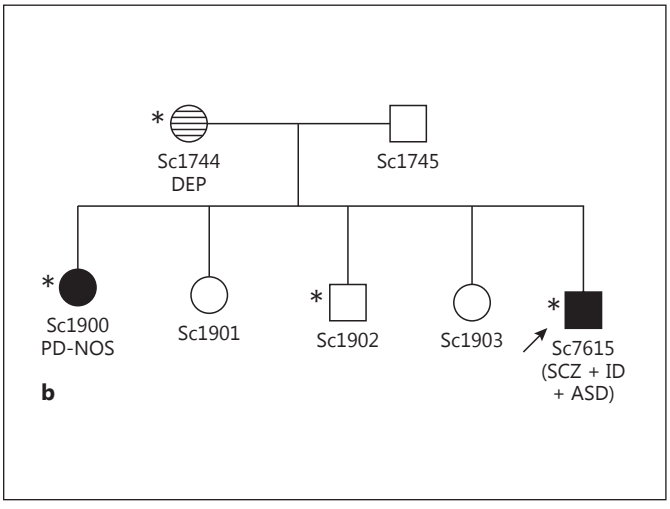

Fig. 2. a Microarray analysis of subject Sc1744 using the Affymetrix CytoScan 750K array shows a single copy gain of the short arm of chromosome 16 at band p13.11. The duplication is approximately 1.65 Mb in size spanning 14,892,975–16,544,033 (NCBI Build 37) and contains a number of genes. The figure was made by adding custom tracks to the UCSC Genome Browser (http://genome.ucsc.edu/cgi-bin/hgGateway). **b** Familial pedigree of Sc7615 (index individual indicated by an arrow). Samples from both parents and all 4 siblings of Sc7615 were screened by microarray. Filled symbols represent subjects affected with psychotic disorders [schizophrenia (SCZ), psychotic disorder not otherwise specified (PD-NOS)] and the horizontal-shaded symbol represents depressive disorder [depression (DEP)]. Other diagnoses include ID and ASD. The 16p13.11 duplication (carrier status denoted by an asterisk) was found to be maternally inherited and also present in two siblings of Sc7615 (Sc1900 and Sc1902). It is interesting to note that Sc1744 (the mother of Sc7615) has a strong family history of schizophrenia and affective disorders on her side of the family.

CIT Copy Number Variants

A duplication in *CIT* was detected in 1 female Scottish patient with schizophrenia (1/647; 0.15%) but was not detected in the Swedish population-based sample or in any control samples from either Scotland or Sweden (tables 2 and 4). This is unsurprising given the low prevalence and de novo nature of this CNV.

No CNVs were found in *PAFAH1B1*, *FEZ1*, *MAP1A* or *PDE4B* in either the Scottish or Swedish samples screened in this study.

Allelic Quantification

Allelic quantification was used as a second independent method to confirm the 3 duplications detected in the MAQ analysis in the Swedish sample set. We selected 15 SNPs in the *DISC1* duplication, 2 in the *NDE1* and 8 in the *NDEL1* duplication (fig. 1; online suppl. table SII). The duplications were confirmed in all the individuals.

Discussion

In this population-based CNV study, we detected duplications in *DISC1*, *NDE1* and *CIT* in the Scottish sample set and in *DISC1*, *NDE1* and *NDEL1* in the Swedish unrelated samples. We found far fewer deletions, detecting only 2 in *DISC1* and 1 in *NDE1* in the Scottish samples. No deletions were detected in the unrelated population-based Swedish samples. Duplications may result in elevated mRNA and functional protein which might produce alterations at the cellular or pathway level. Alternatively, tandem duplications may disrupt the normal gene sequence, causing reduced expression of the gene and protein, or result in dysfunctional protein expression causing haploinsufficiency or loss-of-function.

A *DISC1* duplication, encompassing the first exon, was found in patients and control individuals of the population-based sample, as well as in the related patients and

Downloaded by:
Cardiff University
131.251.254.32 - 6/22/2016 4:17:50 PM

their unaffected first-degree relatives and appears to be an inherited CNV. GWAS and next-generation sequencing approaches have not identified a clear association between *DISC* locus variants and schizophrenia, bipolar disorders and major depressive disorder, suggesting that there are no common variants at this locus to act independently to increase the risk of developing these disorders. These approaches have however raised the importance of rare genomic events such as CNVs conferring risk for major psychiatric disorders, but the presence of CNVs in *DISC1* and its binding partners has received relatively little attention. Duplications in the *DISC1* locus have been detected in 3 individuals (1 with schizophrenia and 2 controls) [113] and a 2-Mb duplication including 7 genes, including *DISC1* and *DISC2* has been described in two bothers with ASD, attention deficit hyperactivity disorder and mild ID [114]. Interestingly, we detected a deletion encoding intron 3 and 3 alternate exons of *DISC1* in a Scottish patient with schizophrenia which was not found in any of the control samples. We also detected a deletion in *TSNAX-DISC1* in a Scottish control sample. No deletions were observed in the Swedish samples. A 2-Mb maternally inherited deletion, encompassing *TSNAX*, *DISC1* and *DISC2*, has been identified in a child with ASD and has also been shown to be associated with structural MRI changes including gliosis and bilateral cerebral white matter changes [115].

Duplications and deletions of a large region around *NDE1* on chromosome 16p13.11 have previously been detected in CNV studies for autism and/or ID [81, 116] and schizophrenia [62, 67, 117], and described as a potential risk factor for neuropsychiatric disorders. The (overlapping) CNVs probably result from non-allelic homologous recombination between chromosome 16-specific and relatively frequent low copy repeats termed LCR16 [116]. The deCODE genetics study examined 4,345 schizophrenia patients and 35,079 controls from 8 European populations for duplications and deletions at the 16p13.11 locus and found a threefold excess of duplications and deletions in schizophrenia cases compared with controls with duplications present in 0.30% of cases versus 0.09% of controls ($p = 0.007$) and deletions in 0.12% of cases and 0.04% of controls ($p > 0.05$) [117]. In the Scottish population sample in our study, we detected the duplication in 5 patients (2 with schizophrenia; 1 with schizophrenia and ID; 1 with ID alone and in 1 with schizophrenia, ID and ASD) and in no controls (0/352), and the deletion was detected in 1 patient with schizophrenia (1/647) and in no controls (0/352). It has been shown that approximately 16 protein-coding genes are expressed in this 2-Mb duplicated region (fig. 2), 10 of which have evidence of brain expression, of which 5 *(ABCC1, NDE1, NOMO1, NTAN1* and *PDXDC1)* are thought to play a role in brain development [118].

The duplication in *NDEL1* encompasses the complete gene, so potentially may cause an elevated expression of NDEL1 mRNA and intact protein. This CNV was only found in 1 patient with schizophrenia but not in unaffected individuals, so it could represent a rare but potentially pathogenic variation conferring susceptibility to schizophrenia. DNA from the parents of the patient was unavailable for typing, so we could not confirm whether this is a de novo or inherited variation. *NDEL1* null mice are embryonic lethal, but mice with reduced levels of NDEL1 show neuronal migration defects resulting in abnormal organization of the cerebral cortex [119, 120]. At a dosage-sensitive locus with deletion phenotypes, duplications have a high likelihood to also produce disease phenotypes [121]. While deletions of *PAFAH1B1* are known to cause lissencephaly with severe brain malformations, individuals with *PAFAH1B1* duplications showed mild brain malformations and moderate to severe developmental delay [122]. Duplication of *NDEL1* with increased expression of the gene and protein may result in a phenotype with 'milder' affected brain structure and/or function such as psychiatric disorders. Interestingly, the observed duplication also encompasses part of *MYH10*. This gene encodes myosin heavy chain 10 non-muscle (myosin IIb) that is abundantly expressed in the brain and enriched in the post-synaptic density of neurons. It is a molecular motor that binds and contracts actin filaments and has been shown to play an essential role in axonal outgrowth, dendritic spine motility and synaptic function [123, 124]. Interference with the expression of this gene or the function of its protein, maybe in combination with overexpression of *NDEL1*, possibly constitutes an interesting pathological mechanism implicated in schizophrenia. The low frequency of the variant nevertheless requires more patients and also more control individuals to be typed to confirm the relationship of this CNV with these disorders.

In published genome-wide CNV studies, 4 recurrent but rare deletions, at 22q11.2 (VCFS or Di George region), 1q21.1, 15q11.2 and 15q13.3, showed significant association with schizophrenia in large patient-control and trio samples [62, 63]. An elegant translational study using human induced pluripotent stem cell-derived neural progenitor cells, carrying the 15q11.2 deletion, has recently shed light on how this CNV may associate with neurodevelopmental disorders [125]. As a result of hap-

Downloaded by:
Cardiff University
131.251.254.32 - 6/22/2016 4:17:50 PM

loinsufficiency of *CYFIP1*, a gene within 15q11.2 that encodes a subunit of the WAVE complex which regulates cytoskeletal dynamics, the neural progenitors carrying this mutation show deficits in adherens junctions and apical polarity. By engineering a similar mutation into a mouse model, they were able to demonstrate defective radial glial cell migration in the developing mouse cortex [125]. Other rare CNVs detected (almost) exclusively in patients were described as possible risk factors [61–67, 126], supporting the hypothesis that rare variants with relatively high penetrance contribute to the aetiology of schizophrenia. In the literature, 5 of the CNVs associating with schizophrenia were duplications, raising the potential pathogenic role duplications have in disease causation: a de novo duplication at 15q13.1 spanning *APBA2* [61], a duplication at 7q21 including *MAGI2* [65], a duplication at 11p13 encompassing *HIPK3* [127], a de novo duplication at 12q24.23 comprising 8 exons of *CIT* and a de novo duplication at 14q32 spanning *DICER1* [64].

In conclusion, DISC1 and several of its interacting partners, which are proposed to be important for normal neuronal function, are likely candidates for involvement in schizophrenia, schizoaffective disorder and/or bipolar disorders. Our findings provide further evidence for involvement of these genes in neuropsychiatric disorders and also support the hypothesis of structural variation playing an important pathogenic role. Although the variants we have detected are rare, particularly those that are family specific, they are likely to be intractable to GWAS, which is of course optimised for the detection of common variants across populations. Variants in *DISC1*, which were originally implicated in a single Scottish family, have only ever reached genome-wide significance levels when studied using linkage analysis, consistent with their rare frequency and large effect size. Although exceptionally rare, they may nonetheless be biologically very informative. The consequences of these CNVs on transcript and protein level should be further investigated. The functional implication of these variants in mental illness and the mechanism of disease causation remain elusive, although the potential of investigating this in neuronal cell types derived from human induced pluripotent stem cells holds much promise.

Acknowledgements

We would like to thank all of the patients, relatives and control individuals who participated in the study. We are indebted to the late Prof. Walter Muir, Chair of Developmental Psychiatry and Honorary Consultant in Learning Disability Psychiatry, University of Edinburgh, who initiated these studies and whose work was dedicated to the welfare of the patients who generously participated. We are also grateful to Mrs. Pat Malloy for her assistance with DNA collection and MAQ assays screening of the Scottish samples. The Scottish sample collection was supported by a grant from the Chief Scientist Office (CSO), part of the Scottish Government Health and Social Care Directorates. This research was funded by grants from the CSO to B.S.P. (grant CZB/4/610), The Academy of Medical Sciences/Wellcome Trust to M.J. (grant R41455) and The RS Macdonald Charitable Trust (grant D21419 together with J.H.), the Swedish Research Council (grants 2003-5158 and 2006-4472), the Medical Faculty, Umeå University, and the County Councils of Västerbotten and Norrbotten, Sweden, as well as by grants from the Fund for Scientific Research Flanders (FWO-F), the Industrial Research Fund (IWT) and the Special Research Fund of the University of Antwerp, Belgium. M.J. is funded by a Wellcome Trust Clinical Research Fellowship for MB PhD graduates (R42811). We acknowledge the contribution of the personnel of the VIB Genetic Service Facility (http://www.vibgeneticservicefacility.be/) for the genetic analysis of the Swedish samples. Research nurses Gunnel Johansson, Lotta Kronberg, Tage Johansson and Lisbeth Bertilsson are thankfully acknowledged for their help and expertise. The Betula Study was funded by the Swedish Research Council (grants 345-2003-3883 and 315-2004-6977). We also acknowledge the contribution by the staff in the Betula project.

Statement of Ethics

All human subjects participated after giving written informed consent or assent after receiving a full explanation of the study. The study was approved by the Multi-Centre Research Ethics Committee for Scotland and by the regional Medical Ethics Committees of the Universities of Umeå (Sweden) and Antwerp (Belgium).

Disclosure Statement

The authors declare that there is no conflict of interest with regard to the findings reported in this paper.

References

1 Berrettini W: Evidence for shared susceptibility in bipolar disorder and schizophrenia. Am J Med Genet C Semin Med Genet 2003; 123C:59–64.
2 Craddock N, O'Donovan MC, Owen MJ: Genes for schizophrenia and bipolar disorder? Implications for psychiatric nosology. Schizophr Bull 2006;32:9–16.
3 Shao L, Vawter MP: Shared gene expression alterations in schizophrenia and bipolar disorder. Biol Psychiatry 2008;64:89–97.
4 Lichtenstein P, et al: Common genetic determinants of schizophrenia and bipolar disorder in Swedish families: a population-based study. Lancet 2009;373:234–9.

Downloaded by:
Cardiff University
131.251.254.32 - 6/22/2016 4:17:50 PM

5 Ayhan Y, et al: Animal models of gene-environment interactions in schizophrenia. Behav Brain Res 2009;204:274–81.
6 Craddock N, Forty L: Genetics of affective (mood) disorders. Eur J Hum Genet 2006;14: 660–668.
7 Gershon ES, Alliey-Rodriguez N, Liu C: After GWAS: searching for genetic risk for schizophrenia and bipolar disorder. Am J Psychiatry 2011;168:253–256.
8 Bassett AS, Scherer SW, Brzustowicz LM: Copy number variations in schizophrenia: critical review and new perspectives on concepts of genetics and disease. Am J Psychiatry 2010;167:899–914.
9 St Clair D, et al: Association within a family of a balanced autosomal translocation with major mental illness. Lancet 1990;336:13–16.
10 Blackwood DH, et al: Schizophrenia and affective disorders – cosegregation with a translocation at chromosome 1q42 that directly disrupts brain-expressed genes: clinical and P300 findings in a family. Am J Hum Genet 2001;69:428–433.
11 Millar JK, et al: Genomic structure and localisation within a linkage hotspot of Disrupted In Schizophrenia 1, a gene disrupted by a translocation segregating with schizophrenia. Mol Psychiatry 2001;6:173–178.
12 Ekelund J, et al: Chromosome 1 loci in Finnish schizophrenia families. Hum Mol Genet 2001;10:1611–1617.
13 Ekelund J, et al: Replication of 1q42 linkage in Finnish schizophrenia pedigrees. Mol Psychiatry 2004;9:1037–1041.
14 Hwu HG, et al: Linkage of schizophrenia with chromosome 1q loci in Taiwanese families. Mol Psychiatry 2003;8:445–452.
15 Curtis D, et al: Genome scan of pedigrees multiply affected with bipolar disorder provides further support for the presence of a susceptibility locus on chromosome 12q23-q24, and suggests the presence of additional loci on 1p and 1q. Psychiatr Genet 2003;13:77–84.
16 Brzustowicz LM, et al: Linkage disequilibrium mapping of schizophrenia susceptibility to the CAPON region of chromosome 1q22. Am J Hum Genet 2004;74:1057–1063.
17 Macgregor S, et al: A genome scan and follow-up study identify a bipolar disorder susceptibility locus on chromosome 1q42. Mol Psychiatry 2004;9:1083–1090.
18 Hennah W, et al: Haplotype transmission analysis provides evidence of association for DISC1 to schizophrenia and suggests sex-dependent effects. Hum Mol Genet 2003;12: 3151–3159.
19 Hamshere ML, et al: Genomewide linkage scan in schizoaffective disorder: significant evidence for linkage at 1q42 close to DISC1, and suggestive evidence at 22q11 and 19p13. Arch Gen Psychiatry 2005;62:1081–1088.
20 Cannon TD, et al: Association of DISC1/TRAX haplotypes with schizophrenia, reduced prefrontal gray matter, and impaired short- and long-term memory. Arch Gen Psychiatry 2005;62:1205–1213.
21 Callicott JH, et al: Variation in DISC1 affects hippocampal structure and function and increases risk for schizophrenia. Proc Natl Acad Sci USA 2005;102:8627–8632.
22 Thomson PA, et al: Association between genotype at an exonic SNP in DISC1 and normal cognitive aging. Neurosci Lett 2005;389:41–45.
23 Maeda K, et al: Differential expression of disrupted-in-schizophrenia (DISC1) in bipolar disorder. Biol Psychiatry 2006;60:929–935.
24 Qu M, et al: Positive association of the Disrupted-in-Schizophrenia-1 gene (DISC1) with schizophrenia in the Chinese Han population. Am J Med Genet B Neuropsychiatr Genet 2007;144B:266–270.
25 Palo OM, et al: Association of distinct allelic haplotypes of DISC1 with psychotic and bipolar spectrum disorders and with underlying cognitive impairments. Hum Mol Genet 2007;16:2517–2528.
26 Chen QY, et al: Case-control association study of Disrupted-in-Schizophrenia-1 (DISC1) gene and schizophrenia in the Chinese population. J Psychiatr Res 2007;41:428–434.
27 Perlis RH, et al: Family-based association study of lithium-related and other candidate genes in bipolar disorder. Arch Gen Psychiatry 2008;65:53–61.
28 Saetre P, et al: Association between a disrupted-in-schizophrenia 1 (DISC1) single nucleotide polymorphism and schizophrenia in a combined Scandinavian case-control sample. Schizophr Res 2008;106:237–241.
29 Chubb JE, et al: The DISC locus in psychiatric illness. Mol Psychiatry 2008;13:36–64.
30 Gasperoni TL, et al: Genetic linkage and association between chromosome 1q and working memory function in schizophrenia. Am J Med Genet B Neuropsychiatr Genet 2003; 116B:8–16.
31 Hennah W, et al: A haplotype within the DISC1 gene is associated with visual memory functions in families with a high density of schizophrenia. Mol Psychiatry 2005;10:1097–1103.
32 Burdick KE, et al: DISC1 and neurocognitive function in schizophrenia. Neuroreport 2005; 16:1399–1402.
33 Whalley HC, et al: Effects of a mis-sense DISC1 variant on brain activation in two cohorts at high risk of bipolar disorder or schizophrenia. Am J Med Genet B Neuropsychiatr Genet 2012;159B:343–353.
34 Di Giorgio A, et al: Association of the SerCys DISC1 polymorphism with human hippocampal formation gray matter and function during memory encoding. Eur J Neurosci 2008;28:2129–2136.
35 Tomppo L, et al: DISC1 conditioned GWAS for psychosis proneness in a large Finnish birth cohort. PLoS One 2012;7:e30643.
36 Kamiya A, Sedlak TW, Pletnikov MV: DISC1 pathway in brain development: exploring therapeutic targets for major psychiatric disorders. Front Psychiatry 2012;3:25.
37 Meyer KD, Morris JA: Immunohistochemical analysis of Disc1 expression in the developing and adult hippocampus. Gene Expr Patterns 2008;8:494–501.
38 Duan X, et al: Disrupted-In-Schizophrenia 1 regulates integration of newly generated neurons in the adult brain. Cell 2007;130:1146–1158.
39 Lipska BK, et al: Expression of DISC1 binding partners is reduced in schizophrenia and associated with DISC1 SNPs. Hum Mol Genet 2006;15:1245–1258.
40 Ozeki Y, et al: Disrupted-in-Schizophrenia-1 (DISC-1): mutant truncation prevents binding to NudE-like (NUDEL) and inhibits neurite outgrowth. Proc Natl Acad Sci USA 2003; 100:289–294.
41 Miyoshi K, et al: Disrupted-In-Schizophrenia 1, a candidate gene for schizophrenia, participates in neurite outgrowth. Mol Psychiatry 2003;8:685–694.
42 Kamiya A, et al: A schizophrenia-associated mutation of DISC1 perturbs cerebral cortex development. Nat Cell Biol 2005;7:1167–1178.
43 Koike H, et al: Disc1 is mutated in the 129S6/SvEv strain and modulates working memory in mice. Proc Natl Acad Sci USA 2006;103: 3693–3697.
44 Clapcote SJ, et al: Behavioral phenotypes of Disc1 missense mutations in mice. Neuron 2007;54:387–402.
45 Hikida T, et al: Dominant-negative DISC1 transgenic mice display schizophrenia-associated phenotypes detected by measures translatable to humans. Proc Natl Acad Sci USA 2007;104:14501–14506.
46 Li W, et al: Specific developmental disruption of disrupted-in-schizophrenia-1 function results in schizophrenia-related phenotypes in mice. Proc Natl Acad Sci USA 2007;104: 18280–18285.
47 Shen S, et al: Schizophrenia-related neural and behavioral phenotypes in transgenic mice expressing truncated Disc1. J Neurosci 2008; 28:10893–10904.
48 Pletnikov MV, et al: Enlargement of the lateral ventricles in mutant DISC1 transgenic mice. Mol Psychiatry 2008;13:115.
49 Pletnikov MV, et al: Inducible expression of mutant human DISC1 in mice is associated with brain and behavioral abnormalities reminiscent of schizophrenia. Mol Psychiatry 2008;13:173–186.
50 Millar JK, Christie S, Porteous DJ: Yeast two-hybrid screens implicate DISC1 in brain development and function. Biochem Biophys Res Commun 2003;311:1019–1025.
51 Morris DW, et al: No evidence for association of the dysbindin gene [DTNBP1] with schizophrenia in an Irish population-based study. Schizophr Res 2003;60:167–172.
52 Camargo LM, et al: Disrupted in Schizophrenia 1 Interactome: evidence for the close connectivity of risk genes and a potential synaptic basis for schizophrenia. Mol Psychiatry 2007; 12:74–86.

Downloaded by:
Cardiff University
131.251.254.32 - 6/22/2016 4:17:50 PM

53 Bradshaw NJ, et al: DISC1, PDE4B, and NDE1 at the centrosome and synapse. Biochem Biophys Res Commun 2008;377:1091–1096.
54 Bradshaw NJ, Porteous DJ: DISC1-binding proteins in neural development, signalling and schizophrenia. Neuropharmacology 2012;62:1230–1241.
55 Wen Z, et al: Synaptic dysregulation in a human iPS cell model of mental disorders. Nature 2014;515:414–418.
56 Alaerts M, Del-Favero J: Searching genetic risk factors for schizophrenia and bipolar disorder: learn from the past and back to the future. Hum Mutat 2009;30:1139–1152.
57 Sebat J, et al: Large-scale copy number polymorphism in the human genome. Science 2004;305:525–528.
58 Rocha D, et al: Seventh international meeting on single nucleotide polymorphism and complex genome analysis: 'ever bigger scans and an increasingly variable genome'. Hum Genet 2006;119:451–456.
59 Nadeau JH, Lee C: Genetics: copies count. Nature 2006;439:798–799.
60 Feuk L, Carson AR, Scherer SW: Structural variation in the human genome. Nat Rev Genet 2006;7:85–97.
61 Kirov G, et al: Comparative genome hybridization suggests a role for NRXN1 and APBA2 in schizophrenia. Hum Mol Genet 2008;17:458–465.
62 International Schizophrenia Consortium: Rare chromosomal deletions and duplications increase risk of schizophrenia. Nature 2008;455:237–241.
63 Stefansson H, et al: Large recurrent microdeletions associated with schizophrenia. Nature 2008;455:232–236.
64 Xu B, et al: Strong association of de novo copy number mutations with sporadic schizophrenia. Nat Genet 2008;40:880–885.
65 Walsh T, et al: Rare structural variants disrupt multiple genes in neurodevelopmental pathways in schizophrenia. Science 2008;320:539–543.
66 Need AC, et al: A genome-wide investigation of SNPs and CNVs in schizophrenia. PLoS Genet 2009;5:e1000373.
67 Kirov G, et al: Support for the involvement of large copy number variants in the pathogenesis of schizophrenia. Hum Mol Genet 2009;18:1497–1503.
68 Reiner O, et al: Isolation of a Miller-Dieker lissencephaly gene containing G protein beta-subunit-like repeats. Nature 1993;364:717–721.
69 Lo Nigro C, et al: Point mutations and an intragenic deletion in LIS1, the lissencephaly causative gene in isolated lissencephaly sequence and Miller-Dieker syndrome. Hum Mol Genet 1997;6:157–164.
70 Uyanik G, et al: Location and type of mutation in the LIS1 gene do not predict phenotypic severity. Neurology 2007;69:442–447.
71 Hirotsune S, et al: Graded reduction of Pafah1b1 (Lis1) activity results in neuronal migration defects and early embryonic lethality. Nat Genet 1998;19:333–339.
72 Gambello MJ, et al: Multiple dose-dependent effects of Lis1 on cerebral cortical development. J Neurosci 2003;23:1719–1729.
73 Hennah W, et al: Families with the risk allele of DISC1 reveal a link between schizophrenia and another component of the same molecular pathway, NDE1. Hum Mol Genet 2007;16:453–462.
74 Bradshaw NJ, et al: PKA phosphorylation of NDE1 is DISC1/PDE4 dependent and modulates its interaction with LIS1 and NDEL1. J Neurosci 2011;31:9043–9054.
75 Brandon NJ, et al: Disrupted in Schizophrenia 1 and Nudel form a neurodevelopmentally regulated protein complex: implications for schizophrenia and other major neurological disorders. Mol Cell Neurosci 2004;25:42–55.
76 Burdick KE, et al: Elucidating the relationship between DISC1, NDEL1 and NDE1 and the risk for schizophrenia: evidence of epistasis and competitive binding. Hum Mol Genet 2008;17:2462–2473.
77 Houlihan SL, Feng Y: The scaffold protein Nde1 safeguards the brain genome during S phase of early neural progenitor differentiation. Elife 2014;3:e03297.
78 Alkuraya FS, et al: Human mutations in NDE1 cause extreme microcephaly with lissencephaly [corrected]. Am J Hum Genet 2011;88:536–547.
79 Bakircioglu M, et al: The essential role of centrosomal NDE1 in human cerebral cortex neurogenesis. Am J Hum Genet 2011;88:523–535.
80 Mefford HC, et al: Recurrent reciprocal genomic rearrangements of 17q12 are associated with renal disease, diabetes, and epilepsy. Am J Hum Genet 2007;81:1057–1069.
81 Ullmann R, et al: Array CGH identifies reciprocal 16p13.1 duplications and deletions that predispose to autism and/or mental retardation. Hum Mutat 2007;28:674–682.
82 Williams NM, et al: Rare chromosomal deletions and duplications in attention-deficit hyperactivity disorder: a genome-wide analysis. Lancet 2010;376:1401–1408.
83 de Kovel CG, et al: Recurrent microdeletions at 15q11.2 and 16p13.11 predispose to idiopathic generalized epilepsies. Brain 2010;133:23–32.
84 Kang E, et al: Interaction between FEZ1 and DISC1 in regulation of neuronal development and risk for schizophrenia. Neuron 2011;72:559–571.
85 Lipska BK, et al: Functional genomics in postmortem human brain: abnormalities in a DISC1 molecular pathway in schizophrenia. Dialogues Clin Neurosci 2006;8:353–357.
86 Yamada K, et al: Association analysis of FEZ1 variants with schizophrenia in Japanese cohorts. Biol Psychiatry 2004;56:683–690.
87 Sakae N, et al: Mice lacking the schizophrenia-associated protein FEZ1 manifest hyperactivity and enhanced responsiveness to psychostimulants. Hum Mol Genet 2008;17:3191–3203.
88 Noiges R, et al: Microtubule-associated protein 1A (MAP1A) and MAP1B: light chains determine distinct functional properties. J Neurosci 2002;22:2106–2114.
89 Halpain S, Dehmelt L: The MAP1 family of microtubule-associated proteins. Genome Biol 2006;7:224.
90 Zhang W, Benson DL: Targeting and clustering citron to synapses. Mol Cell Neurosci 2006;31:26–36.
91 Reese ML, et al: The guanylate kinase domain of the MAGUK PSD-95 binds dynamically to a conserved motif in MAP1a. Nat Struct Mol Biol 2007;14:155–163.
92 Lyons-Warren A, et al: Evidence of association between bipolar disorder and Citron on chromosome 12q24. Mol Psychiatry 2005;10:807–809.
93 Millar JK, et al: Disrupted in schizophrenia 1 (DISC1): subcellular targeting and induction of ring mitochondria. Mol Cell Neurosci 2005;30:477–484.
94 Pickard BS, et al: The PDE4B gene confers sex-specific protection against schizophrenia. Psychiatr Genet 2007;17:129–133.
95 Fatemi SH, et al: Phosphodiesterase-4A expression is reduced in cerebella of patients with bipolar disorder. Psychiatr Genet 2008;18:282–288.
96 Numata S, et al: Positive association of the PDE4B (phosphodiesterase 4B) gene with schizophrenia in the Japanese population. J Psychiatr Res 2008;43:7–12.
97 O'Donnell BF, et al: Neural synchronization deficits to auditory stimulation in bipolar disorder. Neuroreport 2004;15:1369–1372.
98 Kanes SJ, et al: Rolipram: a specific phosphodiesterase 4 inhibitor with potential antipsychotic activity. Neuroscience 2007;144:239–246.
99 Siuciak JA, et al: Behavioral and neurochemical characterization of mice deficient in the phosphodiesterase-4B (PDE4B) enzyme. Psychopharmacology (Berl) 2008;197:115–126.
100 Zhang HT, et al: Anxiogenic-like behavioral phenotype of mice deficient in phosphodiesterase 4B (PDE4B). Neuropsychopharmacology 2008;33:1611–1623.
101 American Psychiatric Association: Diagnostic and Statistical Manual of Mental Disorders: DSM-IV-TR. Arlington, American Psychiatric Publishing, 2000.
102 McGuffin P, Farmer A, Harvey I: A polydiagnostic application of operational criteria in studies of psychotic illness. Development and reliability of the OPCRIT system. Arch Gen Psychiatry 1991;48:764–770.

Downloaded by:
Cardiff University
131.251.254.32 - 6/22/2016 4:17:50 PM

103 Lecrubier Y, et al: The M.I.N.I. International Neuropsychiatric Interview (M.I.N.I.) A Short Diagnostic Structured Interview: Reliability and Validity According to the CIDI. Eur Psychiatry 1997;12:224–231.
104 Nurnberger JI Jr, et al: Diagnostic interview for genetic studies. Rationale, unique features, and training. NIMH Genetics Initiative. Arch Gen Psychiatry 1994;51:849–859; discussion 863–864.
105 Abecasis GR, Cardon LR, Cookson WO: A general test of association for quantitative traits in nuclear families. Am J Hum Genet 2000;66:279–292.
106 Wing JK, et al: SCAN. Schedules for Clinical Assessment in Neuropsychiatry. Arch Gen Psychiatry 1990;47:589–593.
107 Nilsson L, et al: The Betula prospective cohort study: memory, health, and aging. Aging Neuropsychol Cogn 1997;4:1–32.
108 Alaerts M, et al: Support for NRG1 as a susceptibility factor for schizophrenia in a northern Swedish isolated population. Arch Gen Psychiatry 2009;66:828–837.
109 Suls A, et al: Microdeletions involving the SCN1A gene may be common in SCN1A-mutation-negative SMEI patients. Hum Mutat 2006;27:914–920.
110 Sleegers K, et al: APP duplication is sufficient to cause early onset Alzheimer's dementia with cerebral amyloid angiopathy. Brain 2006;129:2977–2983.
111 Perry GH, et al: The fine-scale and complex architecture of human copy-number variation. Am J Hum Genet 2008;82:685–695.
112 Redon R, et al: Global variation in copy number in the human genome. Nature 2006; 444:444–454.
113 Buizer-Voskamp JE, et al: Genome-wide analysis shows increased frequency of copy number variation deletions in Dutch schizophrenia patients. Biol Psychiatry 2011;70: 655–662.
114 Crepel A, et al: DISC1 duplication in two brothers with autism and mild mental retardation. Clin Genet 2010;77:389–394.
115 Williams JM, et al: A 1q42 deletion involving DISC1, DISC2, and TSNAX in an autism spectrum disorder. Am J Med Genet A 2009; 149A:1758–1762.
116 Hannes FD, et al: Recurrent reciprocal deletions and duplications of 16p13.11: the deletion is a risk factor for MR/MCA while the duplication may be a rare benign variant. J Med Genet 2009;46:223–232.
117 Ingason A, et al: Copy number variations of chromosome 16p13.1 region associated with schizophrenia. Mol Psychiatry 2011;16:17–25.
118 Paciorkowski AR, et al: Deletion 16p13.11 uncovers NDE1 mutations on the non-deleted homolog and extends the spectrum of severe microcephaly to include fetal brain disruption. Am J Med Genet A 2013; 161A:1523–1530.
119 Shu T, et al: Ndel1 operates in a common pathway with LIS1 and cytoplasmic dynein to regulate cortical neuronal positioning. Neuron 2004;44:263–277.
120 Sasaki S, et al: Complete loss of Ndel1 results in neuronal migration defects and early embryonic lethality. Mol Cell Biol 2005;25: 7812–7827.
121 Lupski JR: Genomic rearrangements and sporadic disease. Nat Genet 2007;39(suppl): S43–S47.
122 Bi W, et al: Increased LIS1 expression affects human and mouse brain development. Nat Genet 2009;41:168–177.
123 Turney SG, Bridgman PC: Laminin stimulates and guides axonal outgrowth via growth cone myosin II activity. Nat Neurosci 2005;8:717–719.
124 Ryu J, et al: A critical role for myosin IIb in dendritic spine morphology and synaptic function. Neuron 2006;49:175–182.
125 Yoon KJ, et al: Modeling a genetic risk for schizophrenia in iPSCs and mice reveals neural stem cell deficits associated with adherens junctions and polarity. Cell Stem Cell 2014;15:79–91.
126 Van den Bossche MJ, et al: Rare copy number variants in neuropsychiatric disorders: specific phenotype or not? Am J Med Genet B Neuropsychiatr Genet 2012;159B:812–822.
127 Mizuguchi T, et al: Microarray comparative genomic hybridization analysis of 59 patients with schizophrenia. J Hum Genet 2008;53:914–919.

Downloaded by:
Cardiff University
131.251.254.32 - 6/22/2016 4:17:50 PM