HENRY BRYCESON (1832-1909)

ORGAN-BUILDER

AND

EARLY WORK IN THE APPLICATION OF

ELECTRICITY TO ORGAN ACTIONS

J. D. C. HEMSLEY

A Thesis submitted in candidature for the degree of

Philosophiae Doctor

July 2005

Department of Music

Cardiff University of Wales

UMI Number: U201507

All rights reserved

INFORMATION TO ALL USERS
The quality of this reproduction is dependent upon the quality of the copy submitted.

In the unlikely event that the author did not send a complete manuscript
and there are missing pages, these will be noted. Also, if material had to be removed,
a note will indicate the deletion.



UMI U201507
Published by ProQuest LLC 2013. Copyright in the Dissertation held by the Author.
Microform Edition © ProQuest LLC.
All rights reserved. This work is protected against
unauthorized copying under Title 17, United States Code.



ProQuest LLC
789 East Eisenhower Parkway
P.O. Box 1346
Ann Arbor, MI 48106-1346

ABSTRACT

The London organ-building firm founded by the young Henry Bryceson in 1796 traded throughout the nineteenth century, and his family name was to remain on the name-plate of organs until 1917.

Bryceson started his business at a time when the earlier, 'classical' school of organ-building was still flourishing, but he was still young enough to have contributed to the new approach to organ design during the late 1830s. That he did not do so does not detract from his legacy in creating a solidly based firm that formed the foundation for his sons' application of electricity to the action of the pipe-organ and a variety of inventions from the late 1860s onwards.

The promise of early pneumatic technology with its noise, slow release and high maintenance cost, had faded. The Brycesons realised this and by 1868, had installed the first British electric organ in the Theatre Royal, Haymarket.

That France was the undisputed leader in the application of electromagnets to the pipe-organ, is confirmed. C. S. Barker was the builder of the first electric organ at Salon, Bouches du Rhône, in 1866, but the honour for the invention must be accorded to Pierre Stein for his prophetic patent of 1852. Albert Peschard's electric action patents of 1862-3 represent a defining moment when electric action became the basis for a reality that was exploited by Barker until 1870. Thereafter, it fell to the Brycesons to continue the development of the Peschard-Barker system, but the challenges proved too much: the early actions were faced with technical challenges, and above all, the inherent conservatism of a traditional trade. The last electric-action organ built by Bryceson Brothers was the instrument for the 1885 Inventions Exhibition in London, at which the firm was awarded a Gold Medal for its electrical developments. Bryceson also built several important instruments along conventional lines during the 1860-1880s.

Previously, Henry Bryceson's work has not been fully recognised. Yet an organ–builder who pioneered electric action in Britain, had a recognised tuning scale, produced new classes of stops, and invented totally new pipe-forms, deserves a more substantial place in the pantheon of Victorian organ-builders.

By and large, organ recitalists of the time were comfortable with the electric organ. The ability to command the resources of a large organ in a fluid manner from a remote console was highly valued.

This work includes a scientific review of the most important British and French patents and the results of an experimental assessment of the performance of the bichromate battery.

ACKNOWLEDGEMENTS

Many people generously gave much help, support and encouragement during the course of this work. I would like to recognise and thank Dr Faris Alnaemi, Wolfson Centre for Magnetics Technology, Cardiff University; Sylvia Austermann, engineer; Stephen Bicknell, consultant; Dr Anthony Bryceson, Professor Emeritus, London School of Hygiene and Tropical Medicine; Professor Dr H. J. Busch; Pippa Connolly, Library Officer, The Royal Pavilion, Libraries & Museums; Dr James B. Calvert, Professor Emeritus, Denver University; Simon Couture, historian of Casavant Frères; Patrick J. Crowley; R. D. Hird; Pierre Dubois of the Sorbonne University; Jonathan Hopson, National Art Library, Victoria & Albert Museum; Toby Huitson, Canterbury Cathedral; James Inglis; Joan Jeffery; Laure Jestaz, Conservateur, Bibliothèque municipale de Caen; Dr Kurt Leuders; Rusty MacLean, Librarian, Rugby School; John Maidment, historian; C. D. L. Menzies; Jean-Michel Monserand, engineer; John Norman, consultant; Barbara Owen; Paul Peeters of the Göteborg University GoArt Center; Stephen Pinel, Librarian of the Organ Historical Society; Dr Colin E. Pykett, consultant; Cecil Ramsbottom, electrical engineer†; Michael E. Roper, consultant scientist; David Smit; The Revd Canon Dr Nicholas Thistlethwaite, Precentor, Guildford Cathedral; Stephen Van Dulken, British Library Patent collection; Mireille Varjabédian, Assistante-Documentaliste, Musée des arts et métiers; Gerhard Walcker, Orgelbauer; Professor Dr Frank C. Walsh, University of Southampton; Kenneth. R. Weston, Chairman, Jacquet Weston Engineering Ltd; and David C. Wickens. I offer my apology to those whose contributions I may have overlooked.

Terrence G. Robson deserves special mention for his ready advice and assistance on scientific matters concerning electrical and electromagnetic actions, as does the constant encouragement of Dr Christopher J. Kent, my supervisor at the University of Reading during 1999-2001, and thereafter. The encouragement of Norma Marquis Hemsley, my wife, together with her proof reading, is specially noted.

Special thanks are freely accorded to Professor Dr Peter F. Williams, my supervisor at Cardiff University, whose encouragement throughout the last three years made my task much easier. His trenchant comment on many issues was of the utmost value, as was his gentle but firm pressure on my attention to the *minutiae* of the work. I especially value our conversations on various musical issues.

CONTENTS

	Page No.
1. GLOSSARY	1
2. PREAMBLE	6
3. DEVELOPMENT OF ELECTRIC ACTION TECHNOLOGY	14
3.1 Overview	14
3.2 The early phase	19
3.3 The electric organ patent literature	27
3.3.1 British patents	27
3.3.2 French patents	95
3.3.3 German patents	146
3.3.4 United States patents	146
3.3.5 Patents summary	150
3.4 Technical review	159
3.4.1 Batteries	160
3.4.2 Clavier key contacts	167
3.4.3 Electromagnets	170
3.5 Capital and operating costs	172
4. BRYCESON, THE LONDON ORGAN BUILDER	177
4.1 Corporate history	177
4.2 London organ-builders, 1800-1900	190
4.3 Genealogy	202
4.4 Training and education	210
4.5 The Peschard - Barker - Bryceson relationship	212

Page No.

4.6 Other inventions 218

4.7 Publications and sales promotion 221

4.8 Some important instruments 245

4.8.1 Electric action organs 246

4.8.2 Traditional organs 257

5. 'THE ELECTRIC ORGAN' AS A MUSICAL INSTRUMENT 273

5.1 Advantages and disadvantages 273

5.2 reviews by composers, organists and organ-builders 277

6. AN EVALUATION OF BRYCESONS' ROLE IN THE DEVELOPMENT OF THE PESCHARD – BARKER SYSTEM AND NINETEENTH CENTURY ORGAN TECHNOLOGY IN BRITAIN 292

7. BIBLIOGRAPHY 303

APPENDIXES

I. BIOGRAPHIES

1. Louis Charles Albert Peschard 310

2. Charles Spackman Barker 314

3. Paul-Gustave Froment 321

4. Henry John Gauntlett 324

5. Carl Gottlob Weigle 326

APPENDIXES (cont.)

	Page No.
II. DEVELOPMENT OF BATTERY TECHNOLOGY	327
III. INVENTION OF THE ELECTROMAGNET	341
IV. ELECTROMAGNETIC FORCE ANALYSIS	345
V. BICHROMATE BATTERY EXPERIMENTS	351
VI. BT TELEPHONE DIRECTORIES: ANALYSIS FOR THE NAME BRYCESON	364
VII. SURVEY OF LONDON TRADE DIRECTORIES	366
VIII. LONDON ORGAN-BUILDERS, 1800-1900	373
IX. PROVISIONAL BRYCESON OPUS LIST	384

Figures

	Page No.
1. Bryceson's organ for the residence of N. J. Holmes Esq.	12
2. Typical voltaic pile *circa* 1805	16
3. Circuit diagram for Weigle's 10 stop organ	22
4. Roosevelt's electric action *circa* 1875	24
5. Gauntlett's direct action system for pallet operation	35
6. Gauntlett's electrical key contact and clavier coupling system	36
7. Gauntlett's barrel-organ pallet action	39
8. Gauntlett's electric pianoforte action	40
9. Goundry's examples of electromagnets used in conjunction with mechanical relief pallets	44
10. Two examples of Goundry's electromagnetic system for the striking of pianoforte strings	47
11. Barker's electro-pneumatic pallet action	52
12. Barker's mercury pot key contacts	54
13. Barker's drawstop with its electrical connections	55
14. Barker's pneumatic motor for the movement of the stop sliders	56
15. An expanded view of the double electromagnet latching system shown in Figure 14	57
16. Barker's mounting of two bichromate cells on top of the wind reservoir	59
17. Bryceson's pneumatic pallet	62
18. Bryceson's slider pneumatic motor with double touch stop control button and stop on-off indicator	65
19. Bryceson's double pneumatic slider motor with twin electromagnets	66
20. Enhanced view of Brycesons' double touch stop control and on-off indicator	67

Figures (cont.)

	Page No.
21. C. K. K. Bishop's pneumatic lever	71
22. C. K. K. Bishop's patent electrical key contact	73
23. Construction of Schmoele & Mols electromagnet	76
24. The Schmoele & Mols electro-pneumatic clavier action	77
25. Larger view of Schmoele & Mols armature assembly and primary motor	79
26. Schmoele & Mols clavier contact system	80
27. The Willis invention for the use of groove wind for the actuation of subsidiary windchests	83
28. The Willis invention for the use of groove wind – an enhanced view	84
29. The Willis electromagnet	85
30. Vincent Willis's electrical contact system	88
31. Hope-Jones electric clavier action	93
32. Hope-Jones electric clavier action – enlarged view	94
33. Stein's single coil electromagnet for pulling down a pallet	102
34. Computer modelling tool for electromagnets	104-104
35. Stein's horseshoe pallet magnet	105
36. Stein's solenoid pallet magnet	106
37. Stein's slider magnet system	108
38.Stein's horseshoe pallet magnet and auto-magnet switching	109
39. Huot's clavier action	114
40. Barker's electric pallet action	119
41. Barker's electro-pneumatic system	120
42. Barker's design for direct electric action and balancier assisted pallets	122

Figures (cont.)

	Page No.
43. An example of an electrical circuit for the coupling of a three clavier organ	124
44. Pechard's electromagnetically operated balancier pallet	125
45. Examples of clavier key contacts	127
46. Pechard's electrical coupling stop	128
47. The Clair and Ferat direct electric action	130
48. The Clair and Ferat direct electric action	131
49. The Clair and Ferat direct electric action	132
50. Pechard's direct action system with the roller armature	135
51. Pechard's direct action system with lateral attraction but with a small air gap	136
52. Pechard's improved direct action roller armature	138
53. Pechard's electro-pneumatic system	139
54. The Benay direct action system	144
55. The Benay direct action system: clavier coupling	145
56. Roosevelt's direct action with mercury pot key contacts	148
57. The specific conductivity of a bichromate electrolyte	162
58. Bryceson Brothers centenary publicity literature	178
59.The first recorded address for Walter Bryceson, gold and silversmith	179
60. Advertisement for Bryceson Bros., Timber merchants	185
61. Advertisement for Bryceson Bros., Portable buildings contractor	186
62. Active organ-builders in London, 1800-1900	191
63. Death certificate of Henry Bryceson Snr.	206
64. Obituary of Henry Bryceson, *Musical Opinion,* April 1909	207
65. Letters of Administration for the estate of Henry Bryceson	208

Figures (cont.)

	Page No.
66. Bryceson genealogical table	209
67. Pamphlet relating to Henry Bryceson's paper to the College of Organists	222
68. Henry Bryceson's advertisement for the Great Exhibition of 1851	226
69. Henry Bryceson's Price List - front page	230
70. Henry Bryceson's Price List - back page	231
71. Programme for a recital on the St John's Church, Buenos Aires prior to its delivery	232
72. Bryceson Bros. & Morten pamphlet for the SS. Peter and Paul organ, Cork	234
73. Bryceson Bros. & Ellis pamphlet for the organ in Paisley town Hall	235
74. Bryceson Bros. pamphlet of 1894	236
75. Bryceson Bros. front page of a pamphlet of 1896	238
76. Bryceson Bros. two page pamphlet *circa* 1901	239
77. Bryceson Bros. entry in *The Organist and Choirmaster*	242
78. Bryceson Bros. advertisements in *The Organist and Choirmaster*	243
80. Rugby School Chapel organ- original stop specification of 1872	249
81. Rugby School Chapel stop specification issued in December 1894	251
82.Engraving of Rugby School Chapel *circa* 1900	252
83. Specification of the Grand Concert Hall organ- Brighton	259
84. Editorial in *The Church Times*	281
85. A drawing of the original Barker lever	317
86. *Télégraphe à cadran alphabétique (appareils à clavier)*	323
87. Pepy's trough battery of 1803	329
88. One of 200 plunge batteries of the Royal Institution's 'Great Battery'	330
89. Daniell's constant cell of 1836	332

Figures (cont.)

	Page No.
90. The Grove twin fluid cell	333
91. Bunsen's chromic/nitric acid cell	335
92. Two single fluid bichromate cells in series	336
93. Leclanché cell, late nineteenth century	338
94. The *'pile'* of Lalande and Chaperon	339
95. Sturgeon's first electromagnet of 1824	342
96. WCMT results for the Stein single coil magnet	346A-7
97. WCMT results for the Stein twin coil magnet	348-9
98. Full scale drawing of the experimental electrode array	353

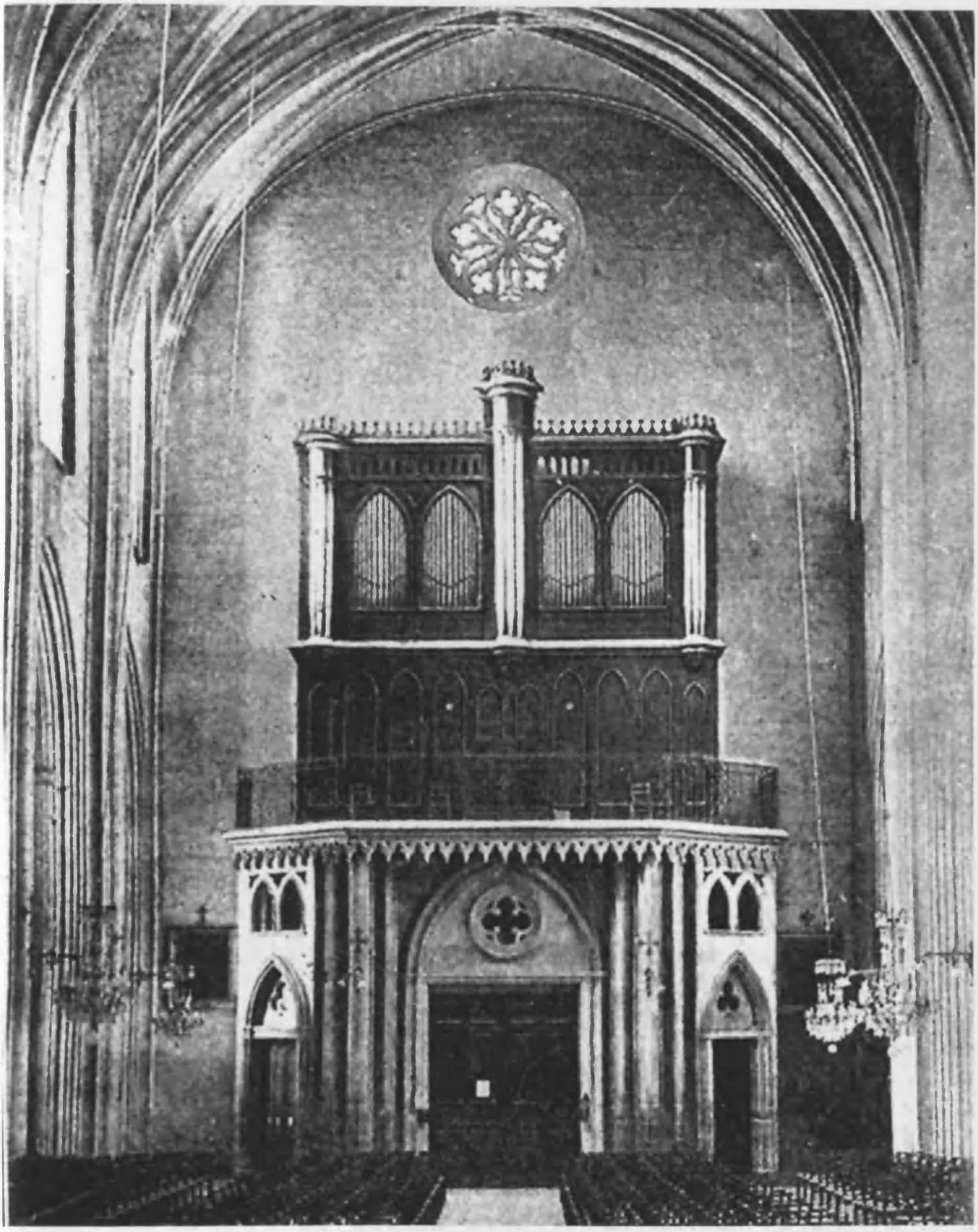

The World's First Electric Organ by Charles Spackman Barker
in 1866 for the Collegiate Church of Saint-Laurent at Salon, Bouches du Rhone, France

(source: *The Recent Revolution in Organ Building, by George Laing Miller, New York: 1912, page 31*)

1. GLOSSARY

Action The system by which the movement of the clavier keys is transferred to the soundboard pallets.

Backfall A lever, generally centrally pivoted, for reversing the direction of movement vertical movement in a clavier action. Also for providing lateral geometry in such an action.

Balancier A bellows or diaphragm installed within the soundboard that is attached to the pallet and thereby relieves the pull-down pressure. The device is continuously vented to atmosphere.

Battery Two or more electrochemical cells connected together to form a battery. Frequently, and for convenience, a single cell is often referred to as a battery.

Borrowing A speaking stop some or all of whose pipes are borrowed from a different rank of pipes to reduce the cost.

Box pallet A pallet (inlet valve) which is moved laterally away from the soundboard inlet, rather than pulled down longitudinally as for the conventional pallet. William Hill designed the device to minimise the force needed to open the pallets of the larger pipes of the pedal organ.

Cell (primary cell) A single electrochemical power source with a finite life, which cannot be 'recharged', as is the case with a secondary cell.

Clavier Clavier and pedal clavier are the terms commonly used in England during the nineteenth-century for the manual and pedal boards. *Clavier* is also the usual French and German term, then as now. For the purpose of this work, 'clavier' will be used as being historically appropriate for the manual and pedal boards.

Compass Nomenclature Nomenclature in nineteenth-century Britain was not standardised. It was very common for Bryceson and others to specify a manual clavier compass as CC to F, or CC to A. In all cases, though, CC represented 'bottom' C (8ft). Sometimes a statement of the number of notes was also made: CC to A (58 notes), or CC to C (61 notes). The pedal clavier was given as CCC to E (29 notes), or CCC to F (30 notes). This system does not, however, define the nomenclature for intermediate notes in the range, and recourse was made to the use of such terms as G Gamut, G Fiddle, C Tenor, a lower case c for middle C etc.

SYSTEM	16ft	8ft	4ft	2ft	1ft	½ft	¼ft
Audsley	CCC	CC	C	c^1	c^2	c^3	c^4
Old English	CCC	CC	C Tenor	c	c Treble	ccc	cccc
Modified Hemholtz[x]	CC	C	c	c^1	c^2	c^3	c^4
	or C_1			or c^{i}	or c^{ii}	or c^{iii}	or c^{iv}

[x] Current practice

Audsley's approved 'tablature' was an attempt to rationalise the loose terminology.[1] For the purpose of this work, the pitch-names used by the Bryceson firm will be used as being historically appropriate.

Drawstop A knob at the console used to put on or take off a rank of pipes, a coupling mechanism, tremulant or other device.

Electric organ The appellation *electric organ* is used to describe a pipe organ in which electricity is employed to replace key elements of the traditional mechanical or pneumatic actions used to convey the movement of the clavier keys to the organ soundboards. A direct electric action is one in which electrical signals from the clavier keys actuate electromagnets, the armatures of which directly pull down the pallets. An electro-pneumatic action is one in which the electro-magnets operate pneumatic motors which pull down the pallets.

Electrolyte Within the context of this thesis, the conducting fluid(s) used in a primary cell.

Jamb The board on either side of the manual claviers where the stop-knobs are placed. Victorian organ jambs are frequently inclined slightly towards the player. Occasionally, they may be inclined backwards (as in Vowles' organs). The French style of setting the stop knobs of each manual clavier on the same level as the clavier but in a curved plane towards the player. Not a practice in common use in Britain, although Bryceson probably used it system for N.J. Holmes's concert organ of 1872.

---

1. Audsley, George Ashdown, *The Art of Organ-Building* 2 Vols (NY: Dodd, Mead, 1905), II, p. 23. Reprinted Dover Publications Inc., NY, 1965.

Kegellade A nineteenth-century German soundboard (windchest) in which all the pipes in a rank are connected to a dedicated separate chamber by means of a cone valve. The air supply to the dedicated chamber is controlled by a valve traditionally known as a 'ventil', connected mechanically or via motor assistance to the appropriate console draw stop.

Keyslip The vertical transverse board between claviers, and below the lowest clavier. Thumb pistons for controlling stop combinations are placed in the key slips.

Measurement The Imperial system of measurement is used throughout this work, as also being historically appropriate. The equivalent metric system values are given in parentheses. Where however, the original data are given in the metric system, eg from a French source, then the Imperial conversion number is given in parentheses.

Orgue de Barberie A nineteenth-century term for a portable organ operated by hand which uses a perforated rolled or folded perforated paper to play set tunes. The instrument was popular in the late eighteenth and early nineteenth centuries for church psalm and hymn playing, and as a secular street organ for popular airs and tunes.

Pallet The valve for admitting air to a soundboard. It usually comprises a rectangular strip of wood having a flat sealing surface, hinged at one end to the underside of the soundboard, and covering a rectangular air admittance slot. The body of the pallet has a depth similar to its width to prevent warping. Its cross-section is triangular. The pallet is drawn down by the movement of the clavier keys, using direct mechanical, direct electrical, electro-pneumatic, or pneumatic action.

Pluck The initial key resistance felt by the player of a mechanical action organ as the pallet is 'plucked' open against the wind pressure.

Porous pot An unglazed earthenware container used to separate the electrolytes of twin fluid primary cells. The pot acts as a membrane that prevents hydrogen polarisation of the positive electrode without significantly affecting the current output.

Power bellows A device for mobilising wind pressure to effect mechanical actions such as soundboard slider movement and pallet opening. It is sometimes known as a pneumatic motor, or pneumatic lever.

Pneumatic lever. A name that is traditionally given to the Barker lever. A device to relieve the pressure required for opening a soundbox pallet against the frictional resistance of mechanical action trains, inertial constraints, the wind pressure in the soundboard and clavier coupling.

Pneumatic motor See power bellows

Soundboard The name for the box or 'chest' on which the pipes stand, to which air is supplied, and which contains the pallet valves and sliders or ventils admitting air to the pipes. It is the term used by Bryceson Bros., but the more common name is windchest.

Symbols The Imperial system is used throughout except where the original data are in the Metric system. For convenience, the equivalent metric numbers are given in parentheses in the text. The following symbols and abbreviations are used:

	Imperial System		Metric System (ISO)	
	Unit	**Abbreviation**	**Unit**	**Abbreviation**
Length	inch foot	in ft	millimetre metre	mm m
Weight	pound	lb	gramme	g
Volume	gallon	gal	litre	l
Time	hour minute second	h min s		
Electrical				
Resistance	ohm	Ω		
Power	watt	W		
Electrical current	ampere	A		
Electrical potential	volt	V		
Power	watt kilowatt	w kW		

Tracker action Also known as mechanical action. The levers, push-and-pull rods, rollers, angular motion cranks etc that mechanically connect the clavier keys to the soundboard.

Tubular-pneumatic action The connecting action which uses low pressure air in small-bore piping, plus pneumatic motors to convey the motion of the clavier keys to the soundboard pallets. The draw-stop action may also be connected to the soundboards by a low-pressure tubular system.

Wind The traditional name for the low-pressure air supplied by the reservoir bellows for sounding the speaking pipes and operating any pneumatic action bellows. Wind pressure varies between 2½ -10in water gauge (60-250 mm), depending on the type of organ, its size and the use of pneumatic bellows. Larger organs may operate with different pressures for the several duties. The centrifugal fan has been used for wind raising since the advent of mains electricity. It is commonly, but inaccurately, called a blower. In the engineering industries, the term blower is reserved for equipment designed to provide a relatively low volume of air at a pressure of at least 100 in (2500 mm) WG.

Windchest The more usual name for soundboard.

2. PREAMBLE

The nineteenth century, and especially the 60-year period 1830–90, saw a higher level of development in pipe-organ technology than in the previous 400 years. During this time, the understanding and application of mechanical, hydraulic and electrical engineering principles in Britain (stemming from its own particular development of industrial technologies) enabled changes in organ design that were urgently needed if the changing role for the instrument was to be satisfied.

This development grew from the national and civic pride in the status of Britain as the world's greatest empire and the leading nation for the export of technology and manufactures. Thus the pipe organ was to become a symbol, amongst many others, of this newfound status. The instrument became a focal point for the new town halls and municipal piles put up by the governing bodies of cities and towns, whose wealth and influence stemmed from manufacturing industries and from the growing working populations. In London, the Crystal Palace (built for the Great Exhibition of 1851 and later transferred to Sydenham), the Alexandra Palace (1873) and the Royal Albert Hall (1871) were the largest public halls in the country.

With the growth in population came the new churches. Large towns and cities needed great buildings and powerful organs to sustain the new found enjoyment of congregational participation through the singing of hymns and psalms. Cathedral church organs, originally designed for intimate choral accompaniment, were enlarged and sometimes repositioned to support the wider use of the nave for ceremonial and civic functions.

There was also a more cultural purpose: the encouragement of choral, instrumental and vocal music amongst a potential audience from the working and professional classes. Indeed the Birmingham Hall (1834), unlike other town halls, was designed for use as a concert hall for the triennial music festivals[2] in addition to its role as an administrative headquarters. There were two other related and ultimately more significant factors at work that would influence organ design.

---

2. Thistlethwaite, Nicholas, *The making of the Victorian organ* (Cambridge: CUP, 1990), p. 92

First, Mendelssohn's influence on the playing of Bach's organ-works in Britain during the late 1830s. Secondly, the work of William Hill, Frederick Davison, and H. J. Gauntlett in moving the British eighteenth-century organ towards the German system of the C-compass for the manual claviers, fully developed Diapason choruses, and an independent pedal division.

The grand organ in the magnificent town hall of Birmingham was indeed an imposing sight with its 32ft pedal towers and diapered pipes, well able to flaunt the growing prosperity of the West Midlands as the hub of British manufacturing industry. Built by Hill in 1834, it was the largest organ in the country. This instrument, together with the large instrument built by Hill for York Cathedral (now Minster) in 1829, were the last two to be built using eighteenth-century building principles with heavy mechanical action and blowing by hand, an organ-type which Hill had grafted a multiplicity of foundation tone and high-pressure reed voices. Mendelssohn, who had played the organ on previous occasions, refused to accompany the 1846 festival unless something could be done to lighten the touch. Cavaillé-Coll described the action as being 'stiff as those made for carillons'. Camidge's letter to Barker on his need to take a break when playing a voluntary on the York organ has entered the realm of legend.[3] Such incidents as these sowed the seed for a stream of technological improvements that was to continue for the remainder of the century.

The first record of a successful system utilising the air pressure raised by the feeder bellows was that developed in 1827 by Joseph Booth, a Wakefield organ builder, who built an instrument for the Parish Church of Attercliffe, near Sheffield. Hopkins and Rimbault[4] recorded that Booth

> placed the lower pipes of the Open Diapason of the GGG manual on a small separate sound-board, and to the pull-down of every separate pallet he attached a small circular bellows below. A conveyance from the great organ soundboard groove conducted wind into these bellows, which opening downwards, drew with it the pallet. These small bellows Mr. Booth used to call puffs.

---

3. Bryceson, Henry, 'Description of the Electric Organ', *Journal of the Society of Arts* 840 (25 December 1868), p. 82
4. Hopkins, Edward J. & Rimbault, Edward. F., *The Organ, its History and Construction* (London: Cocks & co, 3/1877), p. 59

It is not clear, however, in what manner the puffs deflated after the clavier keys were released. Perhaps natural air leakage from the system was enough to ensure a return to the position of rest. About this time, mechanical improvements to the pallets were also appearing. Hill brought out a box pallet around 1828 and later on, Holt[5] devised a pallet hinged across the middle so that one part opened before the other part. Another design comprised a secondary pallet hinged to the lower side of the main pallet, the secondary pallet opening first to relieve the pluck. The downside of these and other designs was to slow the initial speech of the pipe. Nevertheless, the concept of a simple mechanical relief pallet continued to interest organ builders through the nineteenth century. Indeed the subject has recently received a new impetus from several organ builders wishing to maintain the mechanical action principle for their largest instruments.

Nevertheless, it was the invention of the Hamilton-Barker pneumatic lever machine as a powerful tool for the relief of heavy tracker actions that created the revolution in organ design. Following Barker's successful application of his lever to Cavaillé-Coll's 1839 organ at St.-Denis, Paris, he obtained a French patent[6], and then entered into a licence agreement with Cavaillé-Coll. The latter went on to use the 'Barker machine' for most of his larger instruments, including those at St-Roch, La Madelaine, St-Vincent de Paul, St-Clotilde[7], and the rebuild of the eighteenth century Lefebre organ at the Abbaye aux Hommes, Caen[8]. Cavaillé-Coll was still using his improved form of the lever when he rebuilt the original Barker electric-action instrument at St-Augustin, Paris in 1899. He seems to have preferred the pneumatic lever to the tubular pneumatic and electro-pneumatic systems that had been developed in France, and this was, no doubt, one factor that cost him the contract for the organ at the Basilique de Notre-Dame de Valenciennes, where Merklin was the successful bidder in 1891 with his electric-action[9]. In Britain, Willis and a few other builders occasionally used the lever, but it was quickly overtaken by the

---

5. Holt, William, British Patent No. 12886, 1849

6. Barker, Charles-Spakman, French Patent (*Brevet d'invention de quinze ans*), No 9811, 20 June 1839

7. Audsley, George Ashdown, *The Art of Organ-Building* (NY: Dodd, Mead, 1905), pp. 244-46

8. Hinton, J. W., *Story of the Electric Organ* (London: Simkin, Marshall, Hamilton, Kent & Co. 1909), p. 38

9. Strangis, Bruno, Association des Amis de L'orgue, www.perso.wanadoo.fr/orguesvalenciennes/p4

development of tubular pneumatic systems which eliminated mechanical action entirely. Consoles could now be separated from the organ by as much as 10 metres without the player being distracted by a noticeable time delay. Such actions became highly reliable and were employed well into the twentieth century until finally overtaken by the widespread use of reliable electro-pneumatic actions. Today, most organs being built in Britain have mechanical action. Some of the larger instruments, though, employ assistance from electrical or pneumatic devices for the lower notes

The Victorian patent-literature is extensive; there are around 220 British patents covering the period 1837–1901 that concern pipe organ inventions.[10] Nearly 40 percent of these are related to lightening the touch through mechanical, pneumatic or electrical techniques. Another sixteen percent are concerned with the raising and control of wind. Patents granted after 1901 are much fewer in number, reflecting the maturity of the industry's technology.

Lightening the touch, especially with coupled claviers, may not loom so large for the present day organist used to electro-pneumatic or modern lightweight tracker actions. Let him consider the qualitative evidence. Here is George Laing Miller writing in 1913.[11] 'When the organ was a large one with many stops, and the keyboards were coupled together, it required considerable exertion to bring out the full power of the instrument. Sometimes the organist had to stand on the pedals and throw the weight of his body on the keys to get a big chord.' It was not uncommon for an organist to have to exert a finger pressure of 20 ounces (570 g) on a coupled key, whilst a bass key required as much as 50 ounces (1.4 kg). Today, many players would regard a key pressure of 3 ounces (85 g) as excessive. Albert Peschard, one of the earliest workers in electro-pneumatic actions, looked for a key pressure of only 60 g.

---

10. Hemsley, J.D.C., *The Role of Patents in the Development of the Victorian Organ,* University of Reading, M.A. Dissertation 2001, p. 21

11. Miller, George Laing, *The Recent Revolution in Organ Building* (New York: The Charles Francis Press, 2/1913), p. 21

Volta's[12] invention of the primary electric cell in 1799 and the construction of a practical electromagnet by William Sturgeon[13] in 1825 were rapidly followed in the 1840s by the development of the telegraph, for railway signaling, and then for commercial and military communications. The use of electricity was mooted for musical instruments in France as early as the late 1840s[14]. The literature on the application of electricity to pipe organs and other musical instruments is not inconsiderable, with much of the work being carried out in France (1860-1875), Germany (1850-1880), and Britain (1868-1890). Work is also recorded in the US from the late 1860s by Roosevelt[15] and Standbridge.[16]

The organ-building firm of Bryceson is credited with the construction of the first successful electric action organ made in Britain during the late 1860s. Henry Bryceson junior, the head of the firm from 1865, was an educated man who devoted considerable resources to the introduction of electricity into the organ-building industry against much animosity and uninformed criticism. Although he built several organs in the late sixties and early seventies, it was not until 1886 that electric action earned a more favourable approval when the Willis firm reluctantly built its first electric action organ, for Canterbury Cathedral. The first proposal for the organ–console disposition was such that tubular pneumatic action would have been unsatisfactory. The story goes that Henry Bryceson was hired by Willis to provide design assistance for an electric action.[17] In the event, this action remained in service until the end of 1939, and in doing so commanded nothing but praise. By that time, though, electric-action had been routinely employed by the leading British builders for two decades and more.

---

12. Volta, Alessandro, Letter to Sir John Banks (President, Royal Society), RS archive L&P XI 137, May 1800
13. King, W James, 'The development of Electrical technology in the 19th Century', *Smithsonian Institute, National Museum Bulletin* 228 (1962), p. 258
14. du Moncel, Th., Le Vte, *Exposé des Applications des l'électricité* III (Paris:2/1857), p.116
15. 'Electricity Applied to Church Organs', *The Manufacturer and Builder* (8 March, 1876), pp. 64-5
16. Pinel, Stephen, private communication, 10 August 2002
17. Huitson, Toby, *The organs of Canterbury Cathedral* (Canterbury: Cathedral Enterprises Ltd, 2001), p.10

The purpose of the study therefore, is to evaluate the contribution of the Brycesons to nineteenth-century organ building in Britain. The firm had a long existence of over a century. Founded in 1796, it earned the reputation, along with T.C. Bates, of being a leading pioneer in the mass production of barrel organs for the burgeoning Anglican Church[18]. Its work list was similar to that of other Victorian organ-builders such as Holdich, Ingram, Kirkland and Vowles, with an output of mostly one and two-manual instruments. Yet it did build several large organs of three and four claviers. Those of the Brighton Grand Concert Hall, Paisley Townhall, St. Peter, Parkstone, SS. Peter and Paul Cathedral Church (RC), Cork, Eire, Rugby School Chapel and a 65-stop instrument for the Regent's Park residence of N. J. Holmes Esq. (which was reputed to be larger than the Willis organ at St. Paul's Cathedral) are worth special notice, *vide* Figure1.

Henry Bryceson Jnr spoke several languages, and travelled extensively overseas.[19] His paper to the Society of Arts[20], given on 25 December 1868 provides an excellent account of the development of the electric organ and his collaboration with C. S. Barker. On another occasion (1876) he gave a paper to the College of Organists on progress in organ-design. His correspondence with T. C. Lewis on the ownership of electric organ technology in *The Musical Standard* [21] is a model of courtesy in taking to task a conservative organ-builder who had not done his homework. It seems that Bryceson and his brother John had established a successful and worthwhile business although the firm suffered financial difficulties along with other leading organ-builders in the 1880s, and the firm was bought by a group of trade investors in 1888, it being subsequently purchased by the organ-builder Alfred Kirkland in 1893. Henry was only 61, and John 54 years at the time, and both carried on in a managerial capacity.

Bryceson protected his electric-action improvements through British and French patents in 1868 and 1869, and it was not until 1881 that Schmoele and Mols, two US

---

18. Wilson, Michael, *The Chamber Organ In Britain, 1600-1830* (Basingstoke: Ashgate, 2001), p.180

19. Editorial, *Musical Opinion* 379 (April 1909), p. 518

20. Bryceson, Henry, 'Description of the Electric Organ', *Journal of the Society of Arts*, 840 (25 December 1868), pp. 81-90

21. Letters to the Editor, *The Musical Standard* 29 (February 1868), p. 95 (7 March 1868), p.111; (14 March 1868), p.123; (21 March 1868), p.122; (28 March 1868), p. 138

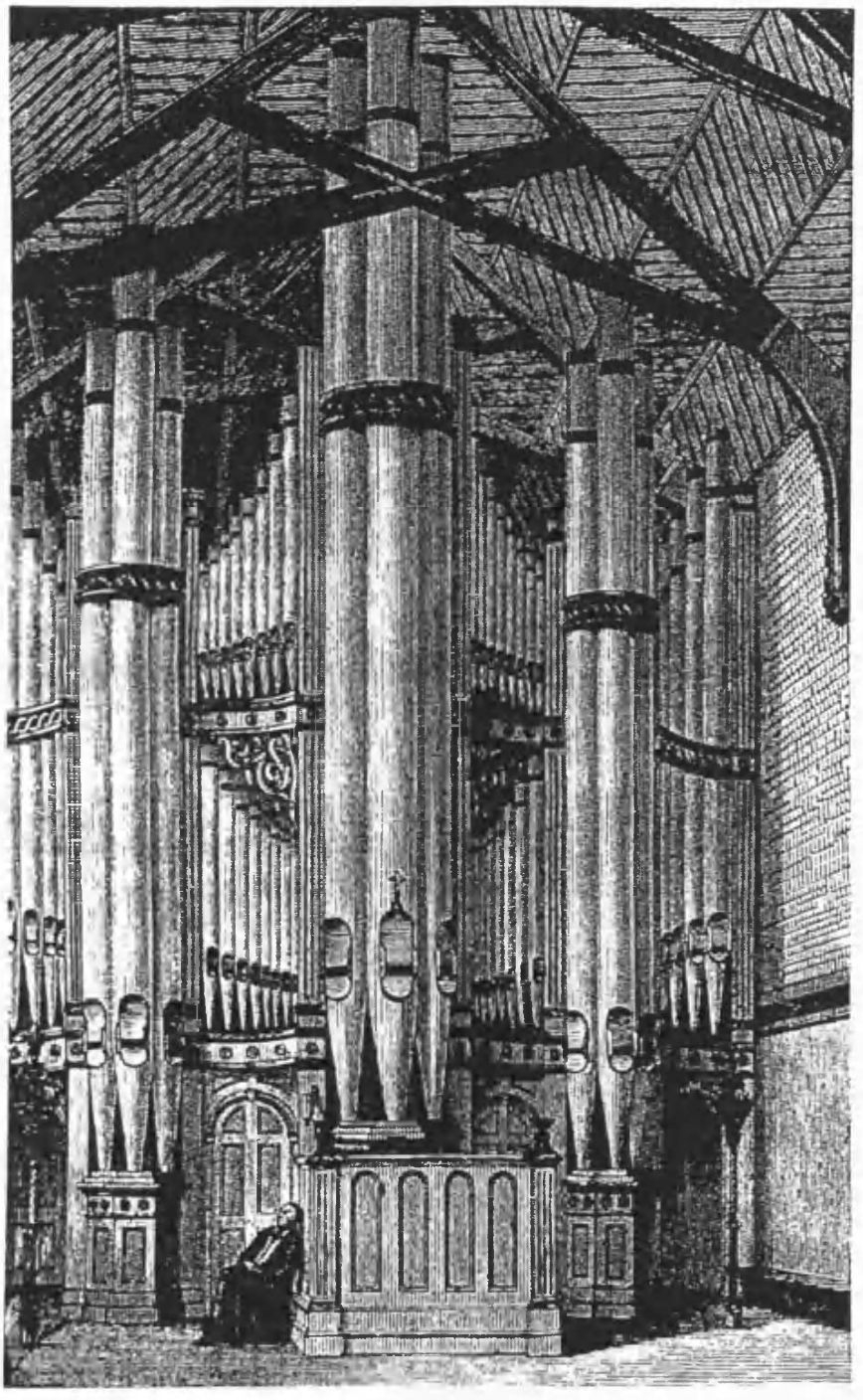

Figure1 Bryceson Bros. organ for the residence of Nathaniel J. Holmes at The Hall, Primrose Hill, Regent's Park, London
(source: *Daily telegraph* 25 August 1893)

citizens with an organ business in Belgium, took the technology further with their low-energy system. Merklin was responsible for a limited application of Schmoele and Mols system in France during the 1880s, but it was not until the 1890s that Hope-Jones in England refined the technology, further creating a mini-boom in electric-action organs through the 1890s until his sudden departure for the US. An important aspect of the present thesis is to review the work on electric-actions carried out in England, France and Germany over this period, and to put Henry Bryceson's original contribution within the broader claims to priority of invention as to who invented what.

Particularly important will be to review the challenges facing Bryceson and other workers relating to primary cell selection and performance, the design of electromagnets, clavier electrical contacts, wiring insulation and overall reliability of the systems. The current literature is sadly deficient. That which exists often reports uninformed opinions that seem to be based on a fear of the 'black box' of electricity. Apart from the technical aspects, what were the cost implications? How did the capital investment for electric-actions compare with that for the new tubular pneumatic systems offered by most organ-builders? Even more importantly, what were the running costs in maintaining a credible and reliable source of electrical power? The accounts of the musical performance of electric-action instruments by contemporary organists and composers will be presented and reviewed in the light of ongoing commentary, for the past and up to the present time. The recent commissioning (2001) of the Klais organ for the Symphony Hall in Birmingham has rekindled the debate on mechanical action for large organs. Apart from the *'en fenêtre'* console, Klais provided a movable console for concert purposes. This console, with its direct-action pallet electromagnets, appears to be an understated apology for a somewhat disappointing mechanical action console.[22] Certainly, most organists, liking to be seen, prefer to use the electric action console for recitals as well as for choral concerts (most performers like to be seen!).

---

22. Hale, Paul, 'Too much of a good thing', *The Institute of British Organ Building Newsletter* 27 (September, 2002), pp. 6-8

3. DEVELOPMENT OF ELECTRIC ACTION TECHNOLOGY

By the start of the nineteenth century, England's industrial revolution was approaching its high point. The country had moved from its historic agrarian culture to one typified by a strong and energetic manufacturing industry: the essential elements of iron production, steam power and a transport system based on water and the railway, were well established. The exciting time for science was the establishment of an experimental approach in physics that was both rigorous and innovative, with an outcome that not only enhanced the efficiency of the traditional manufacturing processes, but opened up a new era in social and cultural life; that outcome was the invention and use of electricity. There were, of course, parallel developments in the other industrialised nations, principally France, Germany, the United States and, perhaps surprisingly, Italy; nevertheless the natural homes for the publication of much of the experimental work were the philosophical and scientific societies in London.

Once the basic principles of electricity were established, it was not long before potential applications for its use were being studied. The earliest commercial deployment of the new science was in the field of communications – the electric telegraph. But even before that, there was an interest in its application to musical instruments, and particularly for the pianoforte[23], '*orgues de barbarie*', and finger organs. Other natural uses for the low power electrochemical sources that had to suffice during the first half of the nineteenth century included the operation of bells, a drive mechanism for clocks, electroplating and for medical shock therapy. In view of the scientific and chronological relevance to the electric action organ, a short description of the wide-ranging growth of this branch of science follows.

3.1 Overview

During the late eighteenth century, the phenomenon of static electricity was well known: the power of lightning discharges, the attraction and repulsion of dry organic materials when rubbed, the experience of an electric shock after walking on a dry

---

23. Berg, Josef, 'Beitrag zur Entwicklungsgeschichte der Orgel mit elektrischer Traktur in Frankreich', *Acta Organologica* 24 (Merseburger: Berlin, 1993), p.108

carpet, are all effects of what is loosely called static electricity. It was not until the last decade of that century that the concept of 'current' electricity was demonstrated.

In 1800, Count Alessandro Giuseppe Antonio Anastasio Volta (1745-1827), a professor at the University of Pavia, and already well known for his experimental work on static electricity, wrote to Sir John Banks, President of The Royal Society announcing some new work on 'electricity excited by the mere contact of conducting substances of different kinds'. This was, indeed, news of the first 'current' electric cell (or battery as it became loosely called).[24] In the letter, Volta described a 'pile' of pairs of dissimilar metals, for example silver and zinc, the thin discs being separated one from the other by a wafer of pasteboard soaked in a common salt solution, *vide* Figure 2. After Volta's death, the concept of an electromotive force (emf), the driving force that generates the electric current, was introduced. The unit of emf was designated the 'volt' in recognition of Volta's pioneering work. We now know that each pair of metals, or cell, provided an electromotive force of approximately 0.9 volts. So twenty cells in a Voltaic pile, for example, generated an emf of eighteen volts, and was capable of supplying a small current for a short time. From Volta's decisive discovery stemmed a broad raft of quantitative experimentation that, within a little more than two decades, had demonstrated electromagnetism, electrolysis, and the fundamental relationship between current, electromotive force and resistance. The practical outcome of this was the development of arc lighting, electromagnets, electric motors and dynamos.

The pace of innovation throughout the first half of the nineteenth century was such that it is matched only by the nuclear and computer sciences in the twentieth century: an outstanding achievement in the light of the available resources at the time. The entrepreneurial spirit of a few scientists, amongst whom were numbered Humphrey Davy (1778-1829), Andre Ampère (1775-1836), Hans Christian Oersted (1777-1851), George Simon Ohm (1789-1854) Michael Faraday (1791-1867) and William Sturgeon (1783-1850), provided the driving force, though we must not forget

24. 'Different kinds', *Phil. Mag.* 7 (September 1800), pp. 289-31



Figure 2 Typical voltaic pile *circa* 1805. From a collection in Pavia University
(Source: www.voltaicpower.com/Biographies/Volta/Bio.html)

the patronage of an upper intellectual class that sustained enterprise after the close of the 'long' eighteenth century'.

Within a few weeks of Volta's announcement, the voltaic cell was instrumental in Nicholson (1753-1815) and Carlisle's (1768-1840) experiment showing that a current passing through salt water decomposed the water into its constituents, hydrogen and oxygen.[25] A year or so later, Humphrey Davy built large batteries of up to 100 cells which he used for a variety of electrochemical experiments, as well as electric arc lighting. By 1807, Davy was able to isolate the alkali metals sodium and potassium from their compounds by using a voltaic battery of 24 pairs of copper and zinc plates.

Already, in the early 1800s, it had been observed that a current flowing in a wire connected to either end of a voltaic battery had an effect on a magnetic needle suspended close by, and that an unmagnetised steel needle became magnetised. In 1807, Oersted started experiments on the relationship between electricity and magnetism, the results of which were published in 1820. By observing the extent of the deflection of a compass needle from is normal north-south orientation, he was able obtain a rough estimate of the current flow in an adjacent wire or coil. He noted that a large deflection was only possible when the wire became red hot, or when the needle was very close to the wire. Oersted's publication created an impact not dissimilar to that which occurred after the fission of uranium was announced in 1939, and stimulated a phase of experimentation that led to the development of practical electromagnetic equipment.

William Sturgeon is credited with the construction of the first electromagnet in 1825, whilst he was a science lecturer at the Royal Military College at Addiscombe in Surrey. In 1826, he is said to have collaborated with William Wilkinson[26] (*obit* 1870),

---

25. Nicholson, William and Carlisle, Anthony, *et al.*, 'Experiments in Galvanic electricity', *Journal of Natural Philosophy, Chemistry, and the Arts* 4 (1800), pp. 179-187
26. Mathew, A. G., *Wilkinson & Sons–A Short Account of the Firm's History* (circa 1948), p. 5. Sumner, William Leslie, *The Organ* (London: Macdonald, 1952), p. 316.
Sumner, Gerald, 'Thomas Wilkinson of Kendal and the Organ in Preston Public Hall', *BIOS Journal* 1 (1977), pp. 26-48. Gerald Sumner (private communication of 8 September 2003) now believes that the collaboration is unlikely to have taken place, as Wilkinson did not build organs until the 1840s at the earliest. Norbert Dufourq, 'L'orgue électrique', *La revue musicale* 10 (November 1929), p. 42 gives a date of 1852 for the experiments. This seems more likely.

a boyhood friend and an organ-builder from Kendal in Cumbria, in pallet experiments using electromagnetic force as a means of opening organ soundboard pallets.

With the publication of Oersteds's work, Ampère and others experimented with the use of the magnetised needle as a telegraph receiver.[27] Ampère's approach was to use a single needle and a single wire for each letter of the alphabet connected to a clavier similar to that of a piano (but without the 'sharps'). Later on, Paul-Gustave Froment, a French instrument maker (1815-1865), used twin claviers for his electric telegraph c. 1850 to transmit the alphabet, with a shift key for the numbers. In 1833, Gauss (1777-1855) and Weber (1804-1891) designed a code that they could transmit by means of a switch that reversed the current, reducing the number of wires to two. Gauss and his co-worker demonstrated their code and two-wire telegraph with a circuit that connected the physics laboratory at Göttingen University with an observatory 1.5 km distant. In 1836, Carl August von Steinheil (1801-1877), a professor at Munich University, constructed a twin-needle magnet system within one coil so arranged that one or other needle moved, depending upon which direction the current took. He then devised an alphabetic code of right and left hand dots that the two needle magnets were able to print out onto a moving strip of paper. The distance between the transmitting station at the Bavarian Royal Academy and the Bogenhausen observatory was 9.3 km.

Although Gauss & Weber and Steinheil had designed working systems, it was not until 24 May 1844 that Samuel Finley Breese Morse (1791-1872) commissioned the world's first commercial telegraph line between the Pratt Street railway station in Baltimore and the Capitol Rotunda in Washington D.C., 44 miles away with the words 'what hath God wrought'. The first cross-channel cable was laid in 1851. This was the year of the Crystal Palace Great Exhibition, for which John Henry Gauntlett (1805-1876) proposed the playing of all the exhibition's organs from one console using electromagnets for the actions: an idea that received no support. The first transatlantic cable was laid in 1866 - the same year that the world's first electric organ was built by C. S. Barker at Salon in France. By 1880, there were 97,568 miles of cable linking Britain to its empire in Africa, Australia, Canada and India.

---

27. Calvert, James B., 'The electromagnetic Telegraph' (2001), www.du.edu/~jcalvert/tel/morsehtm His work provided the background material for this section.

3.2. The Early phase

By the 1850s there was a substantial industry manufacturing components for electric telegraph communications; copper wire, bare for overhead lines, insulated for submarine and subterranean use, batteries of all types, switch-gear, receiving instruments, printers and much more. The opportunity for using electricity in other applications was wide open. The early pipe-organ experiments of Wilkinson and Sturgeon in 1826, if indeed they took place, showed imagination, but they failed because of primitive battery technology and the unavailability of properly insulated copper wire. As early as the 1770s, Jean-Baptiste-Thillais de la Borde (1730-1777) is reported to have foretold the *Clavecin électrique,* and Claude Servais Mathias Pouillet considered the use of electromagnetism for organs in 1831.[28] But it was not until the late 1840s that Froment adapted his telegraph transmitter clavier to play an octave of bells. Theodore du Moncel, the prolific writer on electricity and its applications, referred in his treatise[29] to the use of electromagnets as a convenient means of detaching the claviers of pianofortes and other hammered or struck instruments from their mechanisms, and that M Froment had built several of these instruments, including a rank of tuning forks (*timbres*). Du Moncel became an enthusiastic supporter, and devised an *enregistreur des improvisations musicales* to record for posterity the improvisations played by virtuosi on clavier instruments. Later on, he was a member of the Commission set up in 1863 to review and authorise Barker's proposal for his second electric organ, that for St-Augustin in Paris, the same Commission being responsible for the acceptance of the organ following its inauguration on 17June 1868.[30]

In Germany, Wangemann attributed the first idea for the electric organ to a Hungarian builder by the name of Kaschau, but does not give any further information.[31]

28. Burg, Josef, 'Beitrag zur Entwicklungsgeschichte der Orgel mit elektrischer Traktur in Frankreich', *Acta Organologica* 24 (Berlin: Merseburger,1994), p. 109
29. Th. du Moncel, Le Vte., *Éxposé des applications de L'électricité* 3 (Paris: 1857), pp. 116-7
30. Editorial, 'The past and Future of the Electric Organ', *The Musical Standard* 1399 (1891), p. 426
31. Wangemann, Otto, *Orgel und der Orgelbaukunst* (Demmin: A. Frantz, 1881), pp. 441-8

The organ-builder Friedrich Ladegast seems to have experimented with electricity when he built an organ for the Cathedral at Merseburg in the early 1850s.[32] The results were not satisfactory, so he made no further progress with electric actions. The next milestone was a development by Pierre Stein, a small French organ-builder, who built the world's first direct action pipe-organ for the 1855 *Exposition* in Paris (*vide* Section 3.3.2).

In 1860-61, Albert Peschard, the organist of St-Etienne, Caen, began his formative work on direct and electro-pneumatic actions, in an attempt to relieve the heavy mechanical action of the ancient five-manual instrument over which he presided.[33] His collaboration with C.S. Barker, now resident in Paris, appears to have begun in 1861 (for which there is a full discussion later). Although neither Peschard or Barker seem to have found the relationship entirely happy, it did result in the application of his ideas to what was the first electro-pneumatic instrument for the Collegiate Church of St-Laurent in 1866, and the second in 1868 for the Church of St-Augustin in Paris. Both these organs were built by Barker, using what was called (at least in France) the Peschard-Barker system. In 1867, Bryceson Bros., exhibited an organ at the Paris *Exposition Universelle.* The firm heard about the new technology from Augustus Tamplin, who had been engaged to demonstrate the Bryceson instrument at the *Exposition* and an invitation was arranged for the firm to see the St-Augustin organ then under construction. As a result, Bryceson quickly took the opportunity of acquiring the Barker technology (by now Barker had dropped the Peschard connection) for use in England. The scope and extent of Bryceson's pioneering and innovative work resulting from the technology transfer is discussed later.

Already, though, concern was being expressed about the practicability of electricity. Wilhelm Sauer (1831-1916), the German organ-builder, had visited the *Exposition* and was unimpressed. In a letter to Wangemann, part of which is quoted in the latter's book, Sauer wrote: 'I do remember that it did not meet expectations at all. That it crackled like a machine gun was not its only problem; the attack lacked any

---

32. Fidom, Hans, *Diversity in Unity-Discussions on organ Building in Germany between 1880 and 1918* (Amsterdam: Royal Dutch Organists Association 2002), pp. 97-9

33. Peschard, Albert, *L'Électricité aux grandes orgues* (Paris: Imprimerie Larousse, 1890), p. 22

degree of precision. One heard the crackling first and after that the tone, and as Barker experimented with it for such a long time without any result, I did not pay much attention to the installation, the more so as I said to myself that general introduction would be impossible because of the required maintenance.'

Apart from the technical difficulties, the initial cost and subsequent maintenance expenditure on batteries, there was, for example, uninformed, but perhaps understandable comment on the dangers emanating from thunderstorms and lightning strikes. Indifferent to these fears or, more likely, unaware of the French and English experience, C. G. Weigle, an organ-builder of Stuttgart (*vide* Appendix I), constructed an experimental direct electric action organ in 1870. Weigle (or Weigel as spelt by Wangemann) was enthused enough with the experience to enter a 'model' electric action organ in the 1873 World Exhibition in Vienna. The organist Blumenthal was impressed; he believed that Weigle had found the solution to the poor reliability of mechanical actions. Wangemann also noted that there was considerable interest, but there were also technical defects arising from the heavy current needed to operate the pallet magnets. These defects included fused clavier contacts, and other electrical fire hazards that, according to anecdote, nearly destroyed the exhibition organ.[34] The value of Wangemann's book lies in the quantitative information that it contains concerning Weigle's model organ, its electrical circuitry, magnets, batteries and pallet forces. There is no other reference document published during the mid-nineteenth century with such valuable data.

Weigle's ten-rank organ was a single clavier instrument with pedals. Figure 3 shows the circuit diagram for the operation of the pallets and stops. The pallets are pulled down by horseshoe magnets connected via the clavier contacts to twin fluid primary cells (*Element* or *Batterie*). Wangemann's description mentions Daniell, Bunsen, Meidinger and Grove cells, with the best being the Meidinger cell. There is an *Element* for every 4-6 keys (a clavier of 54 keys requires 9-11 batteries). Meidinger cells needed to be maintained once a month. Today, we find the choice of cell puzzling. The Daniell cell has a potential of only one volt and a low current output, mostly used at that time as a standard in laboratory experiments, whilst the

---

34. Hinton, J. W., *Story of the Electric Organ* (London: Simkin, Marshall, Hamilton, Kent, 1909), p. 22

Direct electrical action with horseshoe magnets supplied by Bunsen cells. A slider soundboard, with the drawstop action also being electrically operated. Note that the power is connected all the time that the stop is drawn.

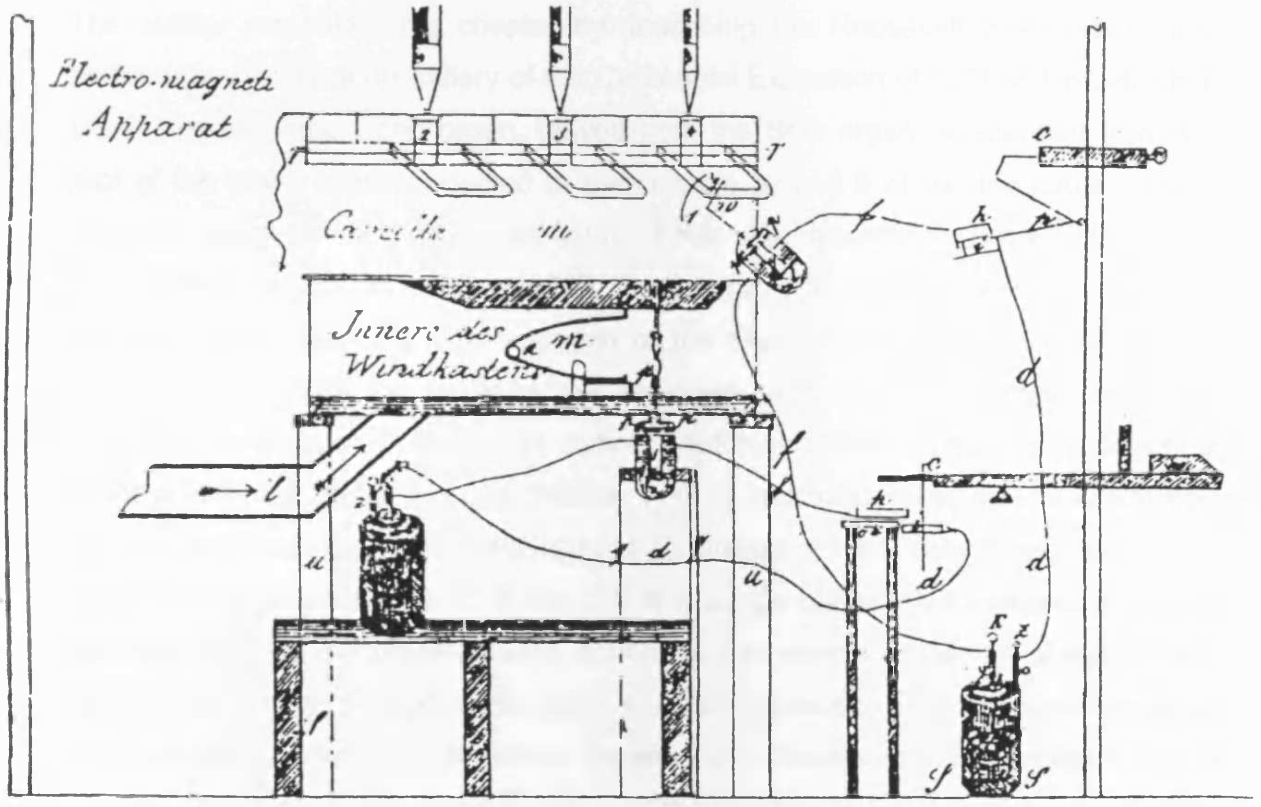

Figure 3 Circuit diagram for Weigle's direct electric action organ at the 1873 World Exhibition, Vienna

Source: Wangemann, Otto, *Orgel und der Orgelbaukunst* (Demmin: 1881)

Meidinger cell has a low current output when compared with the Grove and Bunsen cells, *vide* Appendix II. Nevertheless, Wangemann claims that the power of the battery is sufficient to operate the stops. He further remarks that a medium-strong magnet will easily pull 8-10 lb (3.6-4.5 kg) and that a pull of 3¾ lbs (1.7 kg) is necessary for the *Kegellade* stop system. The pallets required a pull of 350 g. Other observations reported by Wangemann were that the more coils an electromagnet had, the more powerful it was, and that the electromagnetic force of a magnet was proportional to the square of the current applied [incorrect: it is directly proportional]. The author completes his chapter by describing the Roosevelt three-clavier and pedal organ in the north gallery of the Centennial Exposition of 1876 in Philadelphia, USA. The two stop Echo organ, played from the Solo organ, suspended from the roof of the tower, was connected to the console by 200 ft of electric cable. There was also an æthereal (*hängende*) organ of one stop similarly connected by a cable to the Great organ. In 1867 or 1868, the Journal *The Manufacturer and Builder*[35] claims to have seen an electric organ at the shop of Hilborne L. Roosevelt and reports that in 1869 the organ-builder exhibited such an organ at the Fair of the American Institute in Philadelphia during September 1869. This was probably a direct action instrument, but later he later built an improved model for the Chickering Hall (at the corner of Fifth Avenue and Eighteenth Street, New York) in1876 [36], which had pipes placed at 75 ft and 200 ft from the player. This instrument almost certainly had an electro-pneumatic action for the remote organ as shewn in the journal's March 1876 issue, (*vide* figure 4) which appears to form the basis for an as yet unidentified patent).[37] It seems therefore that Roosevelt's development was a decade after Peschard's experiments and the building of the Salon organ in 1866. Did Roosevelt visit Europe in the 1860s? Probably not, but we do know that

---

35. Editorial, 'Electricity Applied to Church Organs', *The Manufacturer and Builder* (8 March 1876), pp. 64-5

36. Stauff, Edward L., *Encyclopedia of Organ Stops* www.organstops.org
This comprehensive site for organ stops was commenced in 2003. It records that the Chickering Hall organ was built by Roosevelt in 1876.

37. Fleming,W.B., Letter to Casavant Frères dated 9 October 1928, now in the Casavant Archive at St. Hyacinthe, Quebec. The Chickering Hall was host to the Philadelphia Centennial Exhibition of 1876 and Roosevelt's organ was ready for the opening. It was taken down around 1881 and refurbished in his Philadelphia factory before being sent to Boston for erection in the Mechanics Hall.

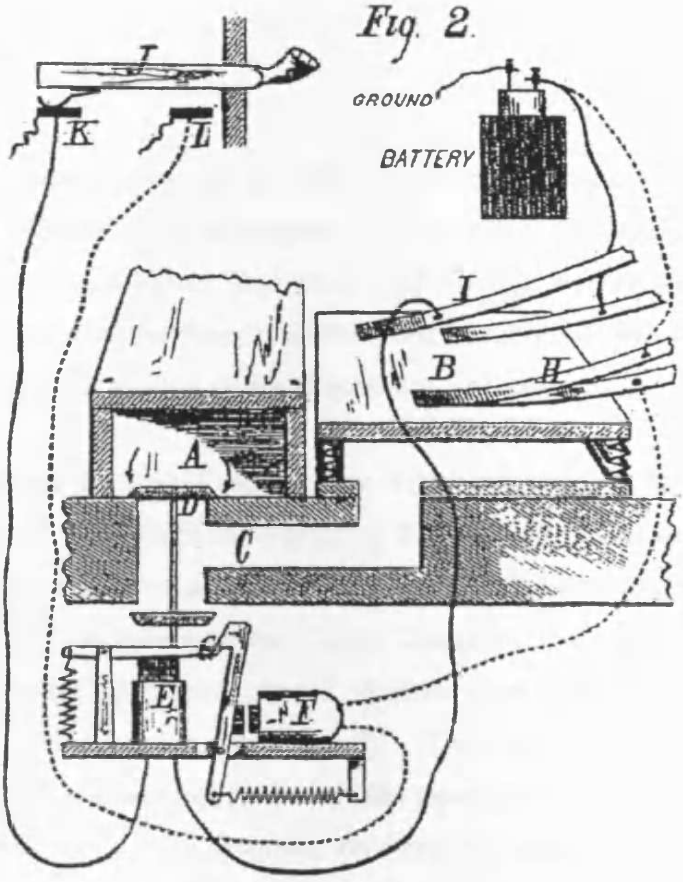

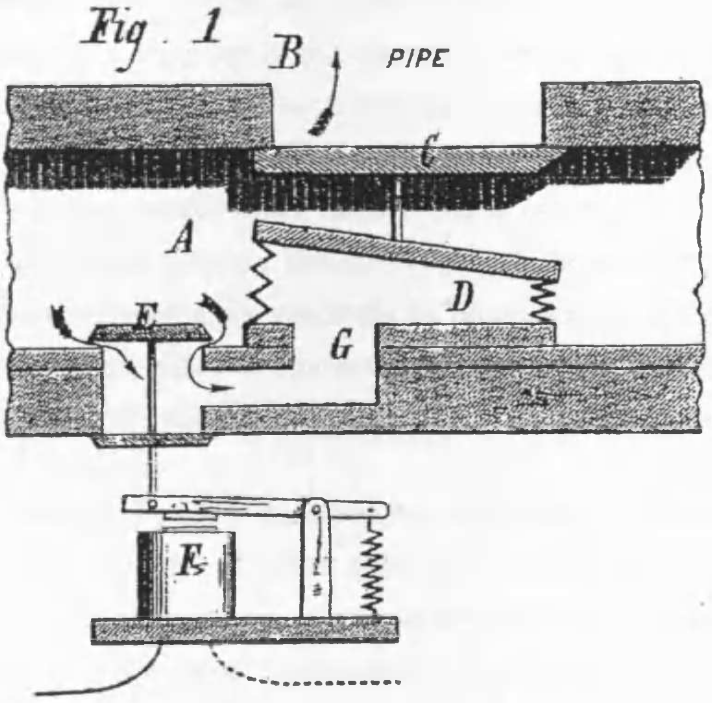

Figure 4 Hilborne Roosevelt's electro-pneumatic action, *circa* 1875
(source: 'Electricity Applied to Church Organs', *The Manufacturer and Builder* (8 March 1876), pp. 64-5

Note the incorrect connections to the twin fluid cells, probably of the Grove type. Also the two electromagnets and their inter-latching system for the draw stop control; a direct copy of Barker's British patent of 1868.

Roosevelt was travelling in Europe in 1870-71 and during a visit to Dublin, assisted Barker in the construction of an organ for that city's cathedral (an organ with Bryceson soundboards). Indeed, Dufourcq suggests that Barker gave Roosevelt his first-hand experience with the French system, experience that would have materially assisted Roosevelt in his design of the Chickering Hall organ.

We also know that the Casavant brothers, an organ-building firm in Canada, came to Europe in the period 1878-1879 to strengthen their experience in organ-building and that they would have been made aware of the French, German and English progress with electric actions[38] (in letters home, Claver Casavant, the elder brother, mentions the names of Cavaillé-Coll, Merklin, Puget, Walcker, and Willis – but did the brothers not meet Barker, Peschard or Bryceson?). The firm claimed to have solved difficulties with the Peschard system, with the assistance of Professor Dr Salluste Duval of the *l'Université Laval à Montréal,* on electrical matters in 1885.[39]

Casavant's first electric action organ was built for Ottawa Cathedral in 1892, thus starting the production of a long line of electro-pneumatic instruments up to the late 1950s, when the trend back to mechanical actions (thanks to Beckerath) based on new design techniques and materials of construction had become common even for large instruments. Another builder in the New World is reputed to have worked on electric actions at the same time as Roosevelt. Pinel[40] believes that John C. B. Standbridge was the first to introduce electricity for organ actions in the US when he built the instrument for St.Augustine's Roman Catholic Church in Philadelphia during 1868. It seems that the organ had an electric action for its echo division.

Barker returned to England in 1870, following the destruction of his workshop in the German bombardment of Paris, at which point only a third electric organ for the Church of St.-Pierre de Petit Montrouge was complete, and an order for the Church of St-François de Xavier[41] unfulfilled. Thenceforth, electric action development

---

38. Lapointe, Laurent, *Casavant Frères 1879-1979* (Soc. d'Histoire régionale de St-Hyacinthe, 1979), p. 13
39. *Ibid,* p. 17
40. Pinel, Stephen, private communication, 10 August 2002
41. Hopkins, Edward J. and Rimbault Edward F., *The Organ, its History and Construction* (London: Cocks & Co, 3/1877), p. 74

in France seems to have ceased until Merklin's promotion of the Schmoele & Mols electro-pneumatic action patent of 1881. In Germany, apart from the very early experimental work by Ladegast in the early 1850s (*Vide* p.19), by Walcker[42] later on in that decade and Weigle's experimental electric action in the early 1870s, no operational instrument was built until 1885 when Voit und Sohne installed an electro-pneumatic organ for the Catholic Church at Forst nei Bruchsal. Thereafter, at least six electric organs were built throughout the remainder of that decade, two of which were erected by the firm of Brauner. These instruments probably utilised the technology described in what appears to be an early electro-pneumatic organ action patent of 1886 issued to the *Brüder Edmund Brauner, Wilhelm Brauner und Friedrich Drexler in Wein.*[43] We must also note an earlier direct electric action patent taken out by Hermann Stiller in 1880 that closely resembles the unit pipe magnet system commercialised by The Wicks Organ Company in the1920s. [44]

The firm of Bryceson Brothers, in England, was more successful, with several organs built in the period 1868-76. The thread continued with Bryceson's organ for the International Inventions Exhibition of that year and Henry Willis's organ of 1886 for Canterbury Cathedral, for whose electro-pneumatic action Bryceson has been suggested as design consultant.[45] Thereafter, Robert Hope-Jones' vigorous promotion set the stage for a growing use of electro-pneumatic action for the larger concert and cathedral organs through the first half of the twentieth century.

---

42. Walcker, Eberhard, private communication, 26 January 2003

43. *Patentschrift Nummer* 41559, Klasse 51: *Musikalische Instrumente. Patentiert im Deutschen Reiche vom 14 October 1886*

44. *Patentschrift Nummer 10728, Klasse 51: Musikalische Instrumente. Patentiert im Deutschen Reiche vom 27 February 1880.*

45. Menzies, C. D. L., private communication, 28 March 2003

3.3. The electric organ patent literature

The patent literature provides a valuable and the most fundamental source of technical information relating to the introduction of electricity into the pipe-organ. There are other contemporary sources, mostly text-books and musical journals, but these relate more to the qualitative operational aspects, and the advantages and disadvantages of the various systems. Later material, published throughout the twentieth century, also provides useful accounts, but seldom with the science and engineering necessary to evaluate the real contributions of the pioneering organ-builders and inventors (for this material *vide* Section 3.4).

The value of patent specifications lies in the often detailed descriptions prepared by the patentees. Almost invariably, the specifications are accompanied by sketches or drawings, the latter occasionally drawn to scale. The specifications also contain useful information such as the full name of the patentee and his residence when filing the application. The document may also include, depending on the country of origin, the name and address of his patent agent (if employed), the date of filing, the date of grant, and the duration of the patent's life.

3.3.1 British patents

During the nineteenth century, English (known as 'British' from 1852) patents had a life of 14 years on the basis that it enabled the patentee to teach two generations of apprentices; seven years being the statutory period of apprenticeship. In the early part of the century, patent reform became urgent. Charles Dickens was moved to write his humorous article *Poor man's tale of a patent*[46] where he describes an inventor's attempts to secure a patent. The poor man had to visit 34 offices. The story included the remark 'England has been chaffed and waxed sufficient', an illusion to an official known as the Deputy Chaff Wax. The Great Exhibition of 1851, where Henry Willis exhibited a 70 stop organ of three claviers, and Henry Bryceson Snr, a somewhat lesser instrument, accelerated demands for reform, and led to the

---

46. Dickens, Charles, *Household Words* 30 (19 October, 1850), pp. 73-5

Patent Law Amendment Act of 1852.[47] From this time, patent rights ran from the date of application, and not from the date of sealing, which might be several months later. The application fee was lowered from £100 to £25, with two renewal fees of £50 (later £100).

During the period 1852-1876 the sealing rate (ie successful application) was 66%, and the average survival rate after three years was 98% (subject to payment of the renewal fees); the patents remaining in force at the end of 14 years were only 10%. It was not until the further reforms of 1883 that specifications were laid open for public inspection, and a new grade of examiner was set-up to ensure that only new inventions were considered for patenting. There was, nevertheless, no formal investigation into novelty. This important step had to await further legislation in 1902. Even so, the search of historic patent specifications for prior art over the previous 50 years was not actually introduced until 1905.

There are two useful chronological catalogues listing the abridgements of musical instrument patents in the Victorian era. The first covers the period 1694-1876, and was published in two consecutive volumes by the Commissioners of Patents and Inventions in 1871 and 1874.[48] The second catalogue of abridgements for Class 88 (Music and Musical Instruments) covers 1855-1905 and was published by His Majesty's Stationery office in 1905.[49] The abridgements, which are often accompanied by reduced size drawings, generally provide a sufficient definition for the reader to judge whether it might be necessary to inspect the full specification (held in the larger municipal libraries, as well as the British Library and the Patent Office in Newport, Wales).

---

47. Dulken, Stephen van, *British Patents of Invention 1617-1977, A Guide for Researchers* (London: British Library, 1999)

48. *Abridgements of Specifications Relating to Music and Musical Instruments A.D.1694-1866* (London: Office of the Commissioners for Patents and Inventions, 1871), A.D.1866-1876 (London: Office of the Commissioners for Patents and Inventions, 1878)

49. *Patents for Inventions - Abridgements of Specifications, Class 88, Music and Musical Instruments, 1855-1905 by decade* (London: HMSO, 1905)

We must also note three other Patent Office indexes listing the titles of patents in chronological order for the period 1617-1852.[50]

The number of patents related to the pipe-organ related during the nineteenth century is shown below[51]:

Decade	Number	Electric action
1830-39	1	0
1840-49	2	0
1850-59	17	1
1860-69	23	5
1870-79	20	1
1880-89	78	5
1890-99	72	9
Total	213	21

During the early part of the century, there were many patents for improvements to the pianoforte, and later on, for free reed instruments. The 213 pipe-organ related patents therefore represent only a small part of the musical instrument patent literature, and from the 1890s onwards there is a marked decline as a result of the maturing technology. The number of patent applications from all sources in the above 70-year period was approximately 515,000.

---

50. *Titles of Patents of Invention, Chronologically Arranged (1617-1852)* (London: The Patent Office, 1854)

    Woodcraft, Bennet, *Titles of Patents of Invention March 2 1617 to October 1 1852, Part II* (London: Queens Printing office, 1850)

    Woodcraft, Bennet, *Reference Index of Patents of Invention March 2 1617-October 1 1852* (London: Great Seal Patent Office, 1852)

51. Revised from a list in Hemsley, J. D. C., The Role of patents in the development of the Victorian Organ, University of Reading, M.A. Dissertation

The 13 patents relating to electric action during the period 1852-1890 are listed below.[52]

Date	Number	Inventor	Address
15 July 1852 (sealed 15 January 1853)	14222	Gauntlett, Henry John	Charlotte Street Portland place Middlesex
10 October 1863 (sealed 22 March 1864)	2490	Goundry, John Wesley	Old Shildon near Darlington County of Durham1868
24 May 1864 (provisional protection only)	1292	Goundry, John Wesley	
22 January 1868 (sealed 7 July 1868)	232	Barker, Charles Spackman	Gloucester Road Regent's Park Middlesex
6 April 1868 (sealed 5 October 1868)	1149	Bryceson, Henry Bryceson, John Morten, Thomas Honor	4 Stanhope Street Euston Road St Pancras Middlesex
4 February 1869 (sealed 23 July 1869)	340	Bryceson, Henry Bryceson, John Morten, Thomas Honor	4 Stanhope Street Euston Road St Pancras Middlesex
14 December 1870 (sealed 9 May 1871)	3279	Bishop, Charles Kenwrick Kenelm	250 Marylebone Road Middlesex
27 July 1881 (sealed 23 January 1882)	3294	Schmoele, William Ford Mols, Alexis	Antwerp, Belgium
4 August 1881 (sealed 28 January 1882)	3386	Schmoele, William Ford Mols, Alexis	Antwerp, Belgium
20 January 1885 Town (sealed 30 June 1885)	819	Willis, Vincent	9 Rochester Terrace Camden Middlesex
23 February 1885 (sealed 23 November 1885)	2443	Willis, Henry	9 Rochester Terrace Camden Town Middlesex
1 July 1889 (sealed 31 May 1890)	10638	Casson, Thomas	Denbigh County of Denbigh
30 September 1890 (sealed 26 September 1891)	15,461	Hope-Jones, Robert	11 Huskisson Sreet Birkenhead County of Chester

52. Copies of the 13 patent specifications listed in the above table were obtained from the Patent Information Section of Leeds Central Library, tel: 0113 21478266

The 14-year life of the patent commenced with the date of filing. Sealing generally took place within 6 months of the date of filing. During the 1890s there was a spate of electric action patents (not considered in this work) filed by J. J. Binns, J. Cowling, P. R. Harrison, Robert Hope-Jones, A. Price and Vincent Willis.

Each of the listed patents is now reviewed.

Gauntlett's patent

Henry John Gauntlett was a solicitor by profession, who became a musician and organist of considerable attainment, *vide* Appendix I. Although he must have been familiar with the workings of the pipe-organ, and indeed must have carried out simple maintenance on the organs he was variously in charge of, he was not experienced as an organ-builder nor did he have any scientific education that would have provided a secure base for taking out what was the first British patent on the employment of electricity in the pipe-organ. Even before his patent of 1852, we have seen that Gauntlett had endeavoured to convince the organising committee of the Great Exhibition of 1851 of the desirability of continuous organ music to amuse the visitors, by joining all the several organ exhibits to one console through the medium of electricity.[53] The idea, not surprisingly, received short shrift. But Gauntlett was not easily dissuaded from this grandiose concept, and his next idea was to join all the church organs of London together with an electrical connection to the console of St Paul's Cathedral, thereby enabling the organist to lead the Sunday congregational singing throughout the metropolis. Gauntlett's further imaginative idea, when he heard that the Crystal Palace Company had been formed to build and operate this wonderful but ill-fated glass house, was to suggest that the company should build replicas of the eight most celebrated organs in Europe, each of which could be played independently, or all together from claviers under the central transept. Again, there was a negative response from the executive committee, one member, a Mr. Fuller, is reputed to have said: 'Dr Gauntlett, you will never hear a note of music in the Crystal Palace; the exhibition is intended for higher purposes. We do not want music, and we will not have it'.[54] What was the reason for these impractical ideas? What was the source of inspiration that Gauntlett drew upon to relate electricity and magnetism to the organ? Certainly, Gauntlett was aware of the heavy mechanical actions of the early to mid-nineteenth-century organ. Through his occasional travels to France and the low countries, he would have been aware of the Barker lever and its exploitation by Cavaillé-Coll and Ducroquet. Perhaps he came across Froment's work in Paris, or more likely, that of Pierre Stein, the organ-builder and the inventor

---

53. Hopkins and Rimbault cites the story. Also Henry Bryceson, *J. Soc. Arts* 840 (December 1868)

54. Edwards, C. A., *Organs and Organ Building* (London:'The Bazaar' Office, 1881), pp. 82-3

for the first patent in France (1852) concerning the application of electricity to organ actions. Did Gauntlett return to London with the intent to capitalise on the French progress with electric actions? There is perhaps a clue to this in lines 14-16 of Gauntlett's opening recital in his patent specification: 'an Invention of "IMPROVEMENTS IN ORGANS, SERAPHINES, AND OTHER SIMILAR WIND INSTRUMENTS, AND ALSO IMPROVEMENTS IN PIANOFORTES," being partly a communication from abroad.'[55] This patent of 1852, taken out six months after that of Stein, has, indeed, some remarkable similarities to that of the Frenchman.

The specification comprises six pages and two sheets of figures. There are three claims for Gauntlett's improvements:

> First, I claim the means herein described or any mere modification thereof for transmitting the movements of the keys and pedals to the valves or pallets whereby the use of stickers, backfalls, squares, trackers, and rollers is avoided.
>
> Secondly, I claim the means herein described or any mere modification thereof for drawing and shutting off the stops, and for opening the shutters of the swell box.
>
> Thirdly, I claim the means herein described or any mere modification thereof for opening the valves of barrel or self-acting organs, seraphines, and other free-reed instruments, and for throwing the hammers of pianofortes into action.

The purpose of the first claim is to simplify the construction of organs by replacing the mechanical action with electrical circuits. In doing so, the effort required to play rapid and difficult music is avoided, whilst the deep fall of the keys, typical of mechanical action, is entirely removed. The second claim refers to the similar use of electricity to replace mechanical devices for the drawing and retiring of the stops,

---

55. Stephen Van Dulken of the British Library Patent Collection, in a private communication, suggests that Gauntlett may have made an arrangement with the inventor of a foreign patent to take out a patent in this country in return for financial consideration. Alternatively, Gauntlett may have 'borrowed' the invention, but covered himself against a future challenge by using the words 'partly a communication from abroad'.

and the coupling of stops to different claviers. It also specifically mentions the use of the pneumatic lever in association with an electromaqnetic valve for the opening and closing of the swell shutters, thus effectively predating, as does Stein's patent, the development of Peschard's electro-pneumatic system in 1863. The third claim simply widens the scope of the patent monopoly to include barrel organ and other wind-blown clavier instruments. Surprisingly, Gauntlett also extended his monopoly to include the striking of the hammers of automated pianofortes, thus losing, quite unrealistically, the principal quality of this instrument: its ability to produce a wide range of tonal dynamics.

No data are provided on the nature or size of the power supply. Gauntlett does however imply that there is at least one battery (i.e. row of multiple cells) for each manual: 'below the keys are four metal bars *c, c,* connected respectively to the batteries which are provided for working the several organs.' An inspection of Sheets I and II of the two drawings suggests an early type of plunge battery made up of several single fluid primary cells connected in series.

The specification does not mention the materials of construction for the clavier contacts, the current-carrying clavier return-springs or other current-carrying metal parts. The drawings do however show the moving contact, that attached to the key, as a pointed metal rod that strikes a contact bar fixed underneath and at right angles to the key, *vide* Figure 5. The drawing of the clavier coupling design (Swell to Great, Choir to Great) (*vide* Figure 6), indicates that the four contacts on the underside of each key make electrical contact with the fixed contact bars at the same time and, more importantly, with complete electrical reliability. Such a system would require very careful and frequent adjustment, because differential wear of the contact points would occur, depending on the range of coupling configurations used by the player. In practice, the high current required by a magnet for a direct pull on the pallet would cause the pointed contacts, even though perfectly adjusted, to spark, and in a short while, to burn-out. We now know that flat circular contacts of alloy steel, such as used in the pre-solid state electro-mechanical relays for telephone exchanges, and the spark coil distributor contacts in older motor cars, provide the most reliable contact system for this and many applications.

a Transverse metal bar and key contact
b Clavier key
c Pin contact point
d Coil spring
e Fixed bar
g Electromagnet
k Pallet

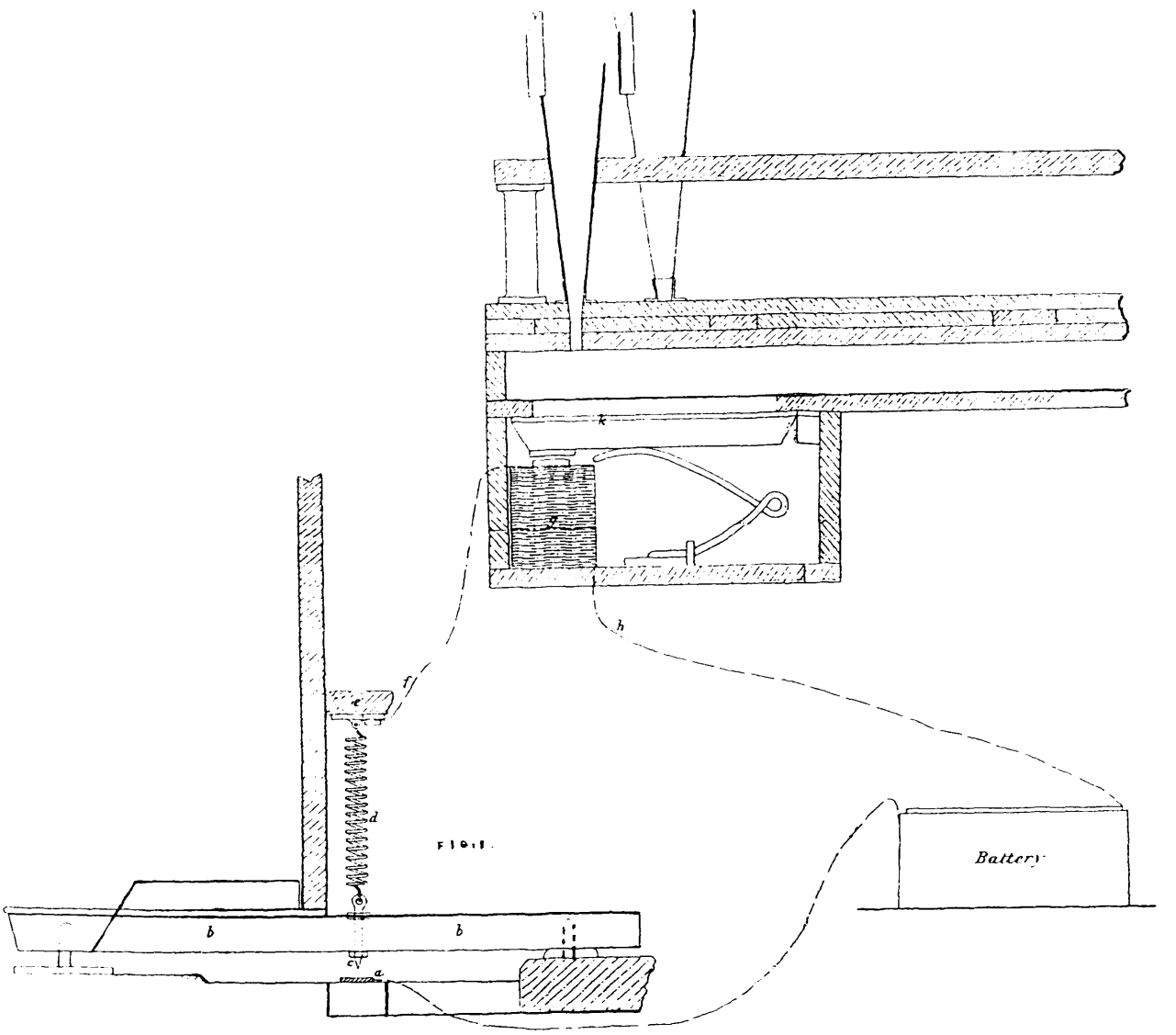

Figure 5 Gauntlett's direct action system for pallet operation
(Figure 1 of Sheet 1 of Patent No. 14222 AD 1852

a Clavier key
b Contact pins
c Transverse metal contact bars
d Electrical connections to the pallet magnets
e Contact springs (also serve to return the keys)

FIG. 2.

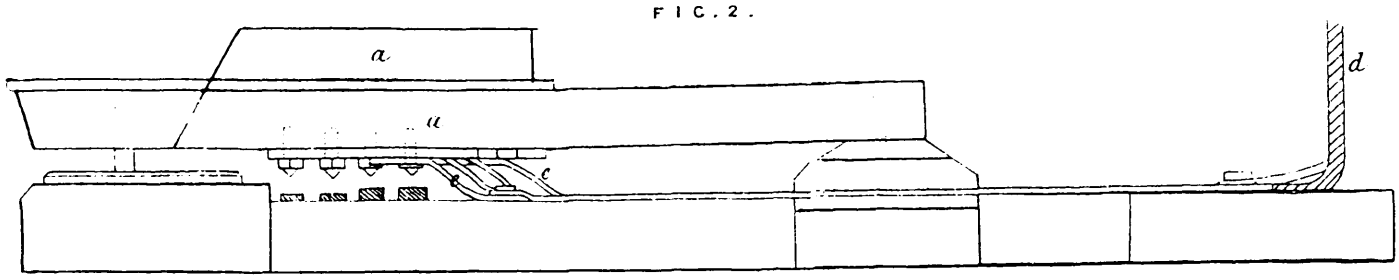

FIG. 3.

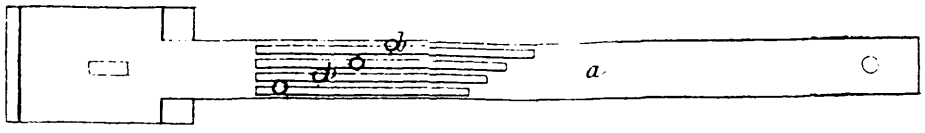

FIG. 4.

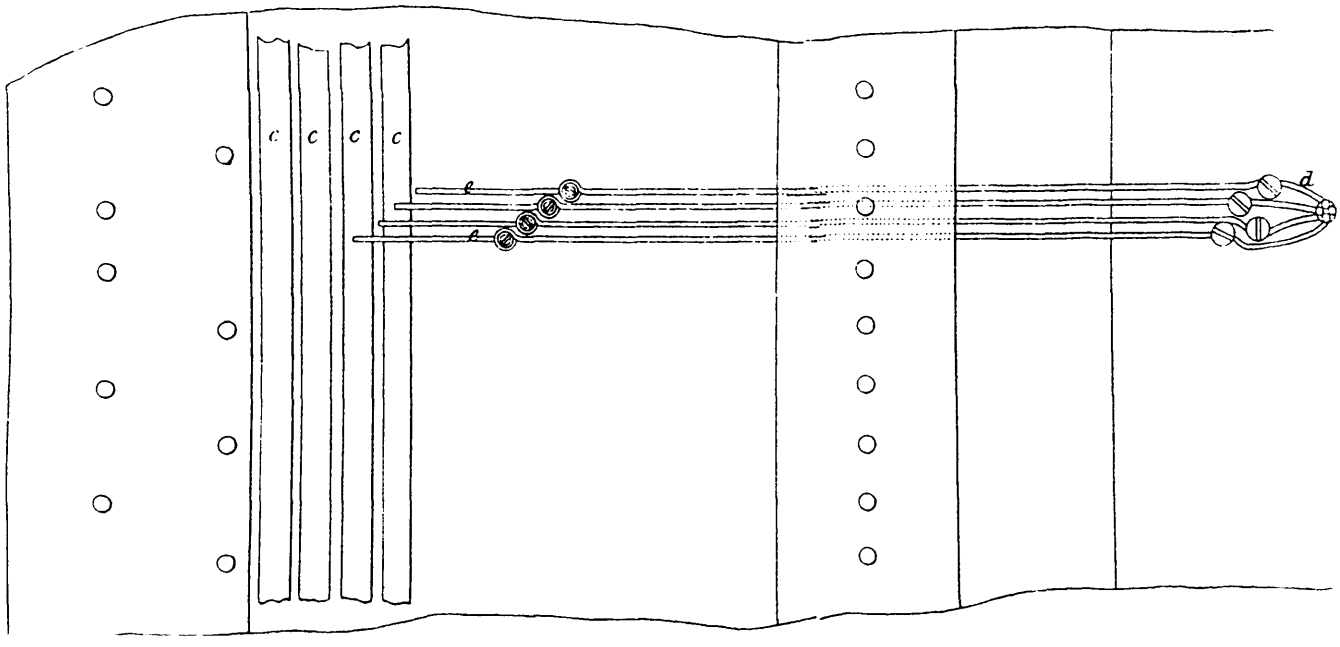

Figure 6 Gauntlett's electrical key contact and clavier coupling system
(Figures 2, 3 and 4 of Sheet 1 of Patent No. 14222 AD 1852)

The nature of the electromagnet core is correctly specified as 'soft iron'. The drawings are only diagrammatic and not scaled, so we are not able to assess the size of the single coil electromagnets with certitude. My estimate of the scaling of the drawing, assuming that the soundboard pallet is 12 in (305 mm) long, does suggest however that the pallet magnet diameter could be 3 ½ in (89 mm), and its length 4 ½ in (114 mm), somewhat larger than Stein's direct action magnet (60 mm diameter by 126 mm long). The Gauntlett magnets are so large that finding the space for them within a conventional windchest would not be possible.

Gauntlett's description of his electro-mechanical system for the drawing and retiring of the stops is very brief, and there are no drawings. He proposes to amplify the short movement of the magnet armature by means of a mechanical lever that provides the much larger lateral movement needed for the sliders. Gauntlett also recognises the need for an additional magnet to retire the stop, although he offers no explanation of how the electrical supply is switched off when the stop is fully drawn or retired. The powerful magnet for a single stop would drain a battery within a few minutes, whilst the drawing or retiring of several stops at the same time would not be possible at all.

Gauntlett is on firmer ground for his swell box concept. Each shutter is connected independently to an electromagnet connected to 'studs [switches] in or near the key slips or by the depression a key or pedal, [by which means] I complete the circuit of the battery through one or more electromagnets, and open one or more shutters at pleasure, thereby I obtain a much slower and more gradual crescendo than by the ordinary swell arrangement.' Again, there are no drawings, and again there is no explanation of how magnets are switched off to prevent battery drain once their work is done.

It is the next sentence that perhaps draws our attention to the consanguinity, through his travels abroad, with Stein's patent: 'The electro magnets and armatures may be worked in conjunction with the apparatus known as the pneumatic lever'. Whether it is Gauntlett's prescience or an idea gleaned from France, the electro-pneumatic concept with all its simplicity, stares boldly from the Specification. Just that little

step further and Gauntlett (and for that matter Stein) could have had in place a workable electro-pneumatic clavier action rather than the dubious direct action with its high power consumption, unreliable contacts and fire-risk. Perhaps they lacked the courage of the Brunels or Bazalgettes of the period and settled for the far more certain, but less valuable, challenge of an electro-pneumatic swell shutter system.

The final part of the Specification is concerned with barrel organs, seraphines, other free-reed instruments and pianofortes. Sheet II shows plan and partial elevation views of 'a barrel organ which is intended to be worked by electric currents'. The pins of the traditional barrel are used to make and break electrical contact with the pallet magnets. Gauntlett goes on to say that 'pegged boards or other analogous contrivances may be employed in lieu of the barrel'. The only matter of real interest stemming from Sheet II is that horseshoe magnets are used in place of single coil unit to operate the pallet valves, *vide* Figure 7. No explanation is offered for this change. Perhaps Gauntlett wished to broaden his monopoly with this option, but whether he knew it or not, he had chosen an electromagnet design that was, and remains, a powerful device for converting electricity into an electromagnetic force. Indeed the horseshoe magnet continues to be widely used by present day organ-builders for pallet and chest magnets. We must assume that Gauntlett, or his technical sources, were unaware of this important piece of knowledge, otherwise the horseshoe would have been the magnet of first choice for the main thrust of the Specification – the conventional finger organ. Finally, and surprisingly, the Specification describes the use of magnets for the hammer action of automated pianofortes, *vide* Figure 8. A comparison with Stein's patent (*vide* 3.3.2) is noted below:

	Gauntlett	**Stein**
Patent application date	15 July 1852	2 February 1852
Clavier pallet action	direct electrical	direct electrical
Stop control action	direct electrical	direct electrical
clavier coupling	electrical	electrical
Swell shutter action	direct or electro-pneumatic	electro-pneumatic
Wind generation	manual	electro-mechanical
Battery (s)	unnamed (single fluid)	twin fluid (Bunsen)

a Rotating barrel with electrical pin contacts
b Horseshoe electromagnet
c Pallet
d Electrical contact spring

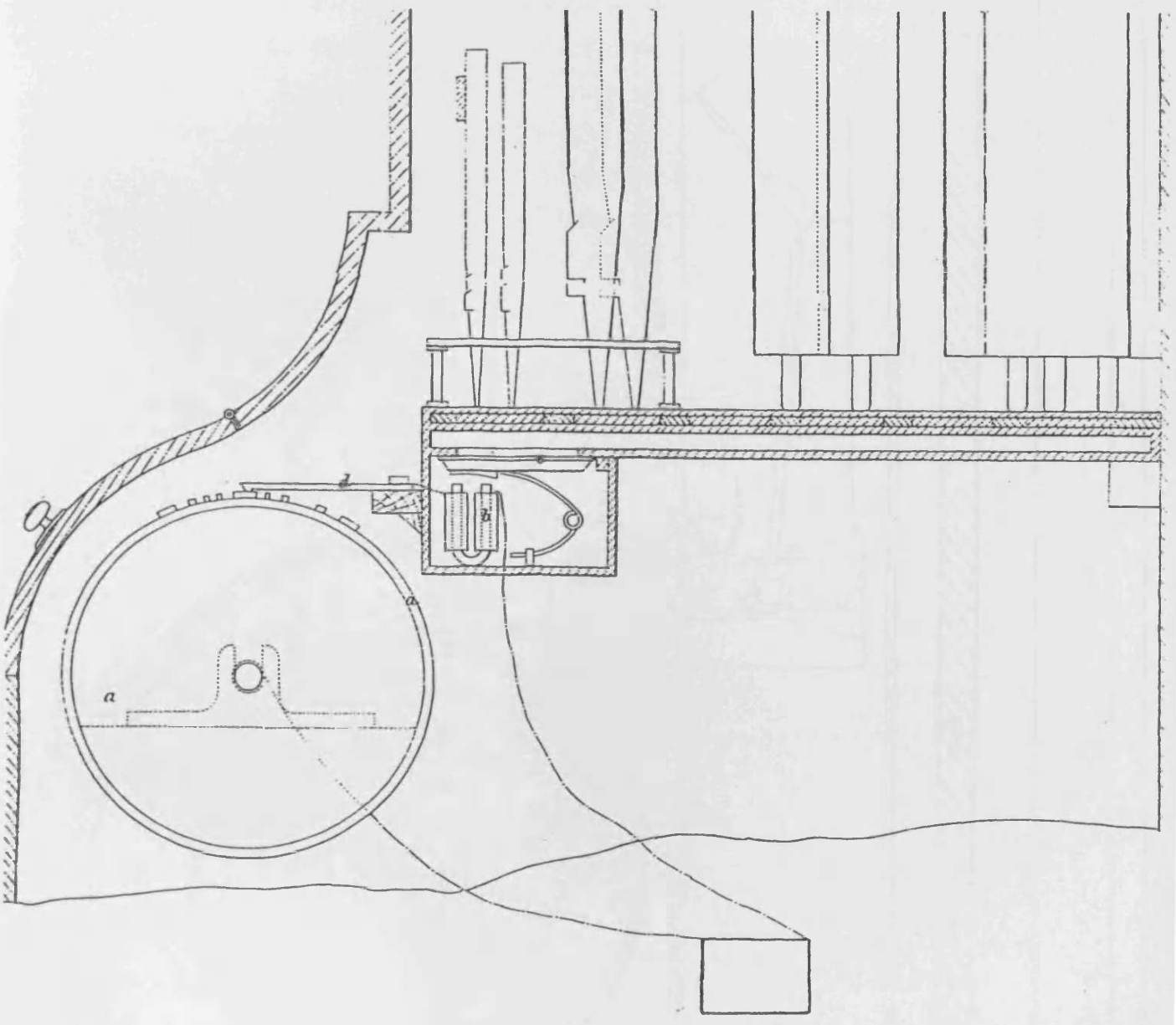

Figure 7 Gauntlett's barrel-organ pallet action
(Figure 1 of Sheet 2 of Patent No. 14222 AD 1852)

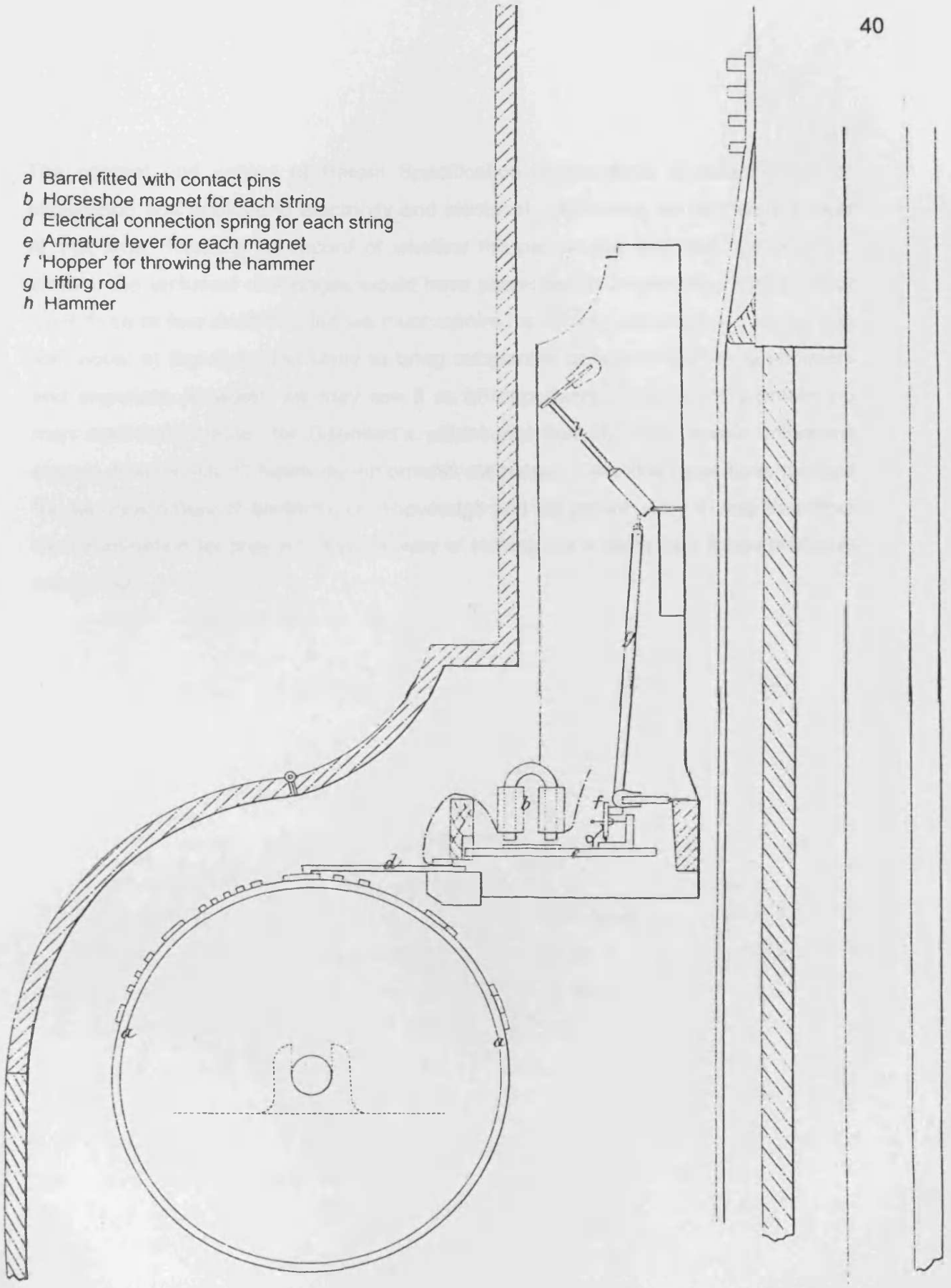

Figure 8 Gauntlett's electric barrel-pianoforte action
(Figure 2 of Sheet 2 of Patent No. 14222 AD 1852)

The content and writing of Patent Specification demonstrate Gauntlett's lack of experience and practice in electricity and electrical engineering as they were known at that time. There is no record of whether the patent was ever put into practice. Indeed, the technical challenges would have prevented its realistic application for at least three or four decades, but we must admire his desire to promote a concept that was novel at that time and likely to bring substantial benefit to both organ-builders and organists. At worst, we may see it as an opportunistic attempt to promote the man and that it does, for Gauntlett's patent and that of Stein, remain milestone events, from which all future developments stemmed. Gauntlett must have realised the tenuous nature of his technical knowledge and his patent, easy to acquire before the examination for prior art, was his way of staking out a claim for a future profitable enterprise.

Goundry's patents

John Wesley Goundry was born in Shildon, Durham on 21 December 1838.[56] He was the son of Jacob Goundry (born 5 July 1803, died 1892), of Eldon near Shildon. His father was a colliery viewer, an early term for the general manager or mining engineer of one or more collieries.[57] He may have been wealthy, as it was quite common for colliery viewers to work for more than one owner and even have shares in, or own, their own mines. Indeed the Eldon Papers in the Durham Record office suggest that Jacob Goundry and three others owned the William Field from 1864.[58] According to the 1881 census,[59] J. W. Goundry, the son, also worked in the industry as a colliery agent (a similar role to that of colliery viewer). His tasks would include the maintenance of the underground plans and surveys and in the event of a disaster was usually one of the earliest in entering the mine to assess the situation at first hand. J. W. Goundry's death-date is not yet known. His name does not appear in the locally viewed 1891 census, or in the national records of 1901. The 1881 census[60] gives his dwelling as North Terrace, Shildon, where he lived with his wife Margaret, seven children and a female servant.

Whilst the source of Henry John Gauntlett's apparent knowledge and expertise as an electrical technologist remains an enigma, we may suppose that Goundry's hands-on experience as a mining engineer would have been helpful in his consideration of the use of electricity and electromagnets in organ construction. He would have been familiar with the electric-signalling systems used in mines and the rail transport facilities associated with the movement of coal and materials in and out of the mine installation. Nevertheless it says much for the initiative and entrepreneurial nature of the Gauntletts and Goundrys of mid-nineteenth century Britain that they ventured upon disciplines in which we would have expected the organ-building trade itself to have taken the lead. Even Albert Peschard in France

---

56. International Genealogical Index / British Isles, www.familysearch.com
57. Hird R. D., private communication, October 2003
58. The Eldon papers, ref nos. D/El 48/3, 48/25, 48/30, Durham County Record office
59. British 1881 census, www. familysearch.com
60. *ibid*

was a lawyer and amateur musician, whilst the earlier developments in that country were catalysed by the technologist, Gustave Froment and the scientist, Theodore du Moncel.

It has to be said that Goundry's Provisional and Complete Specifications are difficult to read. The deployment of his objectives, claims and technical description lack cohesion and his prose is tortuous, unlike the patent specifications of Gauntlett and the other English patentees. His Provisional Specification of 1863 is principally concerned with the introduction of the enharmonic scale (40 sounds to the octave) on ordinary keyboard instruments. To this end, the inventor proposes the use of electromagnets for the key action, and for organs in particular, to draw down pallets of improved design already known in the public domain. Herein lies the other objective of his invention: a solution to the disadvantages of the traditional mechanical actions of the time 'the present complex and cumbrous wooden apparatus is entirely supeseded, and all the advantages attending its use, as sticking, cyphering, and unwieldy touch, obviated'.

Goundry, in his specification acknowledged Gauntlett's patent of 1852, and noted that the form of direct electric action described had not been successfully put into operation (done to safeguard his patent from prior art claims). Goundry also recognised earlier developments in relieving the power needed to pull down the pallets of large instruments and, as his Specification demonstrates, was familiar with the descriptions of such designs as the Hill relief pallet, the Hill box pallet, the Holt pallet (patent no.12886 of 1849) and that of Willis (patent no. 2508 of 1861) *vide* Figure 9.

We may ask: if the mechanical relief pallets of the mid-nineteenth century were successful in their intent, why did Goundry propose electromagnets in association with a relief pallet? The answer lies in Goundry's realisation that mechanical relief pallets were by no means an effective solution to the heavy actions of the time, as their limited application showed, and that the power to open a pallet is matched, to all practical purposes, by the power needed to overcome the friction and inertia

Barker's relief pallet

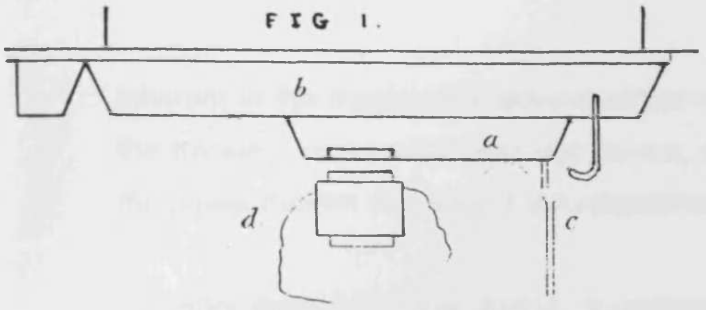

Holt's relief pallet

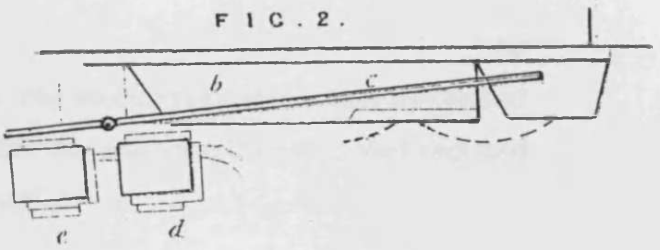

Holt's box pallet for pedal pipes

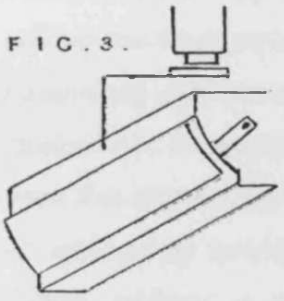

Unknown device

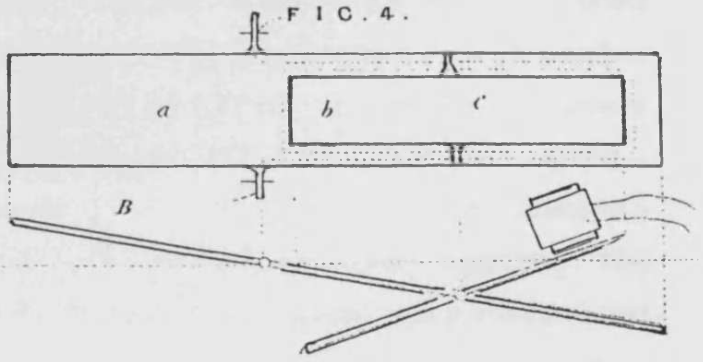

Willis hollow valve pallet

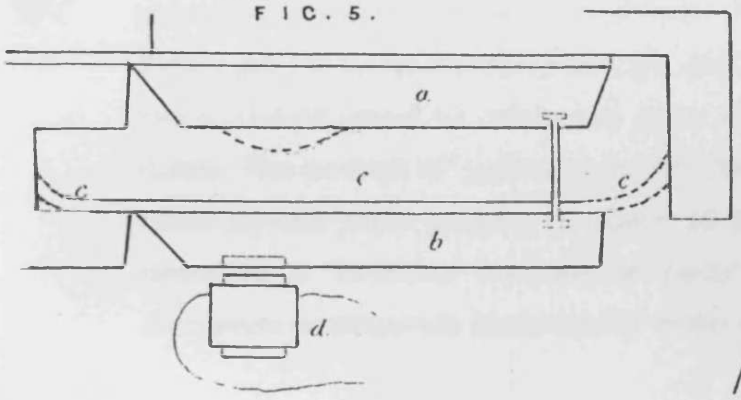

Pallet with pneumatic motor assistance

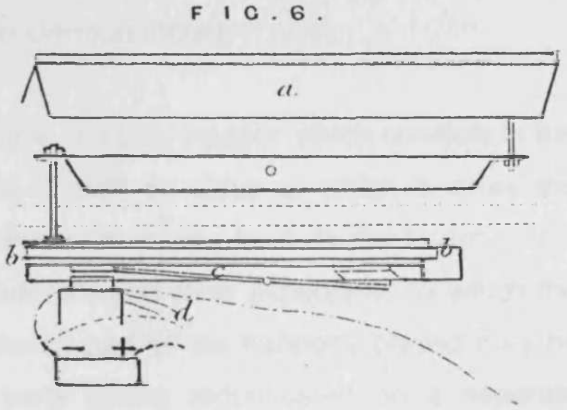

Figure 9 Goundry's examples of electromagnets used in conjunction with a range of mechanical and pneumatically assisted pallets
(Patent No. 2490 AD 1863)

inherent in the mechanical actions of the day. His electromagnetic action by-passed the trackers, rods, roller bars and levers, whilst the associated relief pallet reduced the power burden and size of the electromagnet.

Goundry describes three further advantages for his invention. Firstly, the ease by which the electrical wiring can be designed to provide several coupling configurations. 'By these contrivances, facilities superior to the present are given for uniting the keyboards in any combination, whereas the patent previously mentioned [Gauntlett] only provided means for coupling to a single keyboard'. Goundry further claims that an economy of battery power can be obtained by directing the current from the electromagnet of the played key magnet to all the coupled key magnets – an interesting example of 'getting something for nothing'. But as with Gauntlett's patent, nothing is said about the nature of the electrical power supplies. The representations of batteries in the drawings are simplistic boxes with a + wire at one end and a – wire at the other end.

The second improvement concerns the use of electromagnets in association with pneumatic motors to draw stop sliders. Again, as with Gauntlett and Stein, the sliders are retired by means of springs, and there appears to be no awareness of the heavy current taken for what may be a long period when one or more stops are drawn. The concept of 'getting something for nothing' is restated by using the current taken by one slider magnet to power all the other stops drawn! Goundry further describes a 'universal combination pedal' that we may understand to mean a crescendo or sforzando pedal similar to the German model.

The third improvement is the introduction of a 'melody coupler' which consists in the application of that property of an electric current by virtue of which it takes the shortest route or the best conducting material on its way back to the battery, thus admitting of the interposition of various materials and other expedients by which the melody or highest (and if required the lowest) part of the harmony played may be rendered more distinct than the other parts (being reduplicated on a separate keyboard or set of pipes), whilst the performer is not required to play on more than

one keyboard'. The Provisional Specification finally explains how electromagnets can be used to facilitate the coupling arrangements for the playing of enharmonic pianofortes (*vide* Figure 10), harmoniums and pipe organs, all of which falls outside the understanding of a simple engineer.

The Complete Specification, prepared a few months later, differs significantly. The main objective of the patent is now the use of electromotive power to supersede the ordinary tracker action, with the second objective of reducing the enharmonic system to the simplicity of the 'ordinary keyboard, preserving at the same time the required facilities of modulation'. A further advantage given is that the distance from the console to the organ is limited only by the power of the battery.

There is a deeper technical explanation of the invention and, for the first time in the history of electric organ actions, a key contact system using small pots containing mercury is described together with wiring diagrams showing the several coupling connections. Once again economy of current is described through passing the current from one magnet to the next! Goundry must have realised that his *modus operandi* for the 'melody coupler' described in the provisional document was not electrically feasible, so he introduced double-touch keys where a fully depressed key brings on the solo stop.

The key claims for the invention are [in order of importance] as follows:

1. Electro-pneumatic actions for stop slides, pallets, and wind valves

2. Direct electric action for soundboards pallets

3. The use of electricity for manual coupling and stop control

4. Double-touch keys to facilitate the playing of solo stops

5.The application of electromagnets to the dampers and hammers of pianofortes

6. Adaptation of the enharmonic system to ordinary keyboard instruments

Figure 18 shews two electromagnets, one for the striking of the hammer, the other for raising the string damper. Figure 19 shews a single magnet for the dual duty of striking and raising the damper. The disadvantages of both systems are:

1. The lowering of the damper occurs immediately the clavier key is released
2. There is no control over the striking power of the hammer.

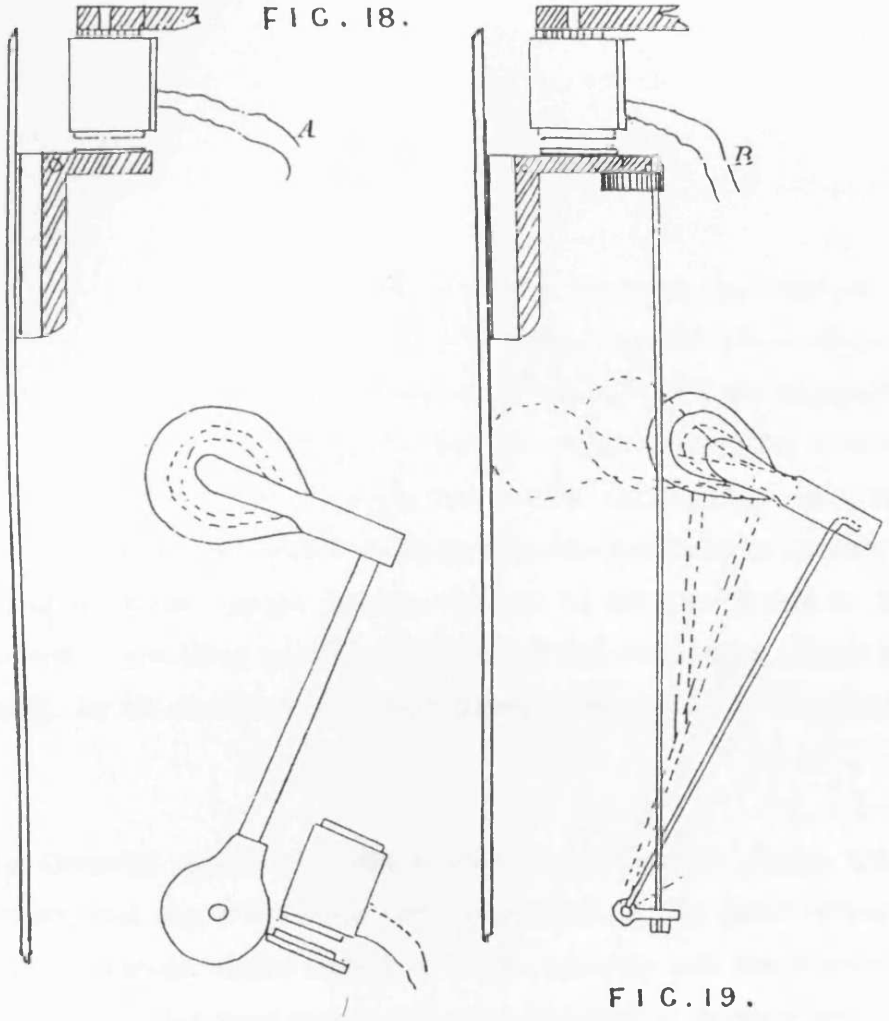

Figure 10 Two examples of Goundry's electromagnetic system for the striking of the pianoforte strings
(Patent No. 2490 AD 1863)

Goundry's claim for the application of the single current principle, that is to say the operation of more than one electromagnet from a single electrical supply, as a means of obtaining 'current economy', is not scientifically sound. Goundry's second patent application of 24 May 1864, No. 1292 received provisional protection only. The invention consists of three parts, but is only one page in length.

The first part is an inconsequential idea for an attachment that holds down the keys by means of a wedge that can be activated by the player's knee or some other convenient means. The second part relates to further improvements in the electromagnetic operation of pallets provided with a flexible diaphragm and pulled down by a pneumatic bellows. Optionally, the opening of the pallets using water power, either directly, or with the intervening use of a pneumatic bellows, is proposed. The third part refers to an application of the pneumatic bellows for operating the swell box shutters, the rate of opening being assisted by a combination of electromagnets and a wheelwork drive from a metronome (like the escapement action of a clock). There are no drawings and the text of the specification is so brief that a full understanding of the improvements described is not possible. After 1864, Goundry's flights of imagination appear to have stopped, as no other patents are recorded in his name. Water power, though, remains an abiding interest to organ builders as a means of providing leverage for key and stop control (as distinct from mere wind raising), as we shall see later with patents taken out by Bryceson and Willis.

In summary, the Goundry patents did little to take forward electric action. Indeed there is no evidence that any of his ideas was put into practice by either himself or any organ-builder. Although organ historians credit Goundry with the concept of electro-pneumatic actions, we have seen prior art by Gauntlett in England and Stein in France. It remains inconceivable that Goundry, a mining engineer, should so misunderstand electrical circuits and Ohm's law in relation to electromagnets coupled in series. His writing is also vague and inexpert, and yet we must applaud his clear intentions, as an amateur, in endeavouring to develop organ-building in concert with the broader technological developments of the time.

We must note here that Goundry took out a third patent (No. 4344) in 1879. This invention is intended to improve the intonation of 'musical instruments having the ordinary pianoforte keyboard' by providing additional pipes, reeds, or strings, 'allowing a much closer approach to perfect tuning in the different tonalities'. Electricity is only mentioned as an optional means in carrying out certain actions, for example the rotation of the pinned barrel that commands the appropriate pipe, or string for the desired tonality. Goundry's preoccupation with perfect fifths suggests that he had an unsympathetic ear to the beating that may be heard with equal temperament tuning, whilst being impervious to the additional cost of three pipes and associated mechanisms for each note of each clavier of an organ. We might also observe the further complications in his proposals such as the shading of pipe mouths or stopper adjustment in the ends of pipes as means of modifying their pitch.

The drawings attached to all three patents indicate a sound knowledge of organ design and construction, whilst his description of the motions of the pinned barrel in ensuring perfect tuning of the organ for Mendelssohn's Sonata No.2, surely suggest that Goundry was a proficient organist, probably of a Primitive Methodist church somewhere in Shildon.

The last we hear of John Wesley Goundry is a letter from him to *The Musical Standard* in 1891.[61] In the letter, Goundry expresses concern that an editorial on the history of the electric organ in a previous issue of the journal extolled Barker, rather than himself, as the inventor of the electro-pneumatic action. He quoted some sentences from his 1863 patent as proof. Unfortunately for Goundry, his reference to an electrically triggered pneumatic system for the opening of pallets was a simple sketch (Figure 6 in the specification) without any textual explanation. He was more concerned with describing an electro-pneumatic system for slider stop operation, just as Gauntlett did a decade earlier. Perhaps his memory of the latter's patent had dimmed. In any case, it was Barker that actually built the first electric organ, just as he, not Hamilton, was the first to install the pneumatic lever as a practical reality in a new organ.

---

61. Goundry, J.W., *The Musical Standard* Vol. 40 (March 1891), p. 242

Barker's patent

During the 32 years that C. S. Barker sojourned in France, he took out four patents. Those of 1839 and 1855 were French *brevets* related to the eponymous pneumatic lever and are not discussed further. His French patent of 1862 was the culmination of his work on electro-pneumatic developments as a collaborator with Albert Peschard, whilst his fourth patent, again on electro-pneumatic systems, was taken out in Britain during 1868 as a direct result of his conversations with Henry Bryceson during the Paris *Exposition Universelle* of 1867, concerning a licence agreement for the exploitation of the British market (*vide* Section 4.5 for a more thorough discussion of the licence arrangements).

In preparing the 1868 patent specification, Barker was able to draw upon the know-how and experience gained from the building and daily use of his electric organs at the Collegiate church of St-Laurent, Salon and St-Augustin in Paris. The French specification of 1862 is short and with only one simple drawing, whilst the 1868 specification has enough engineering design material for a person experienced in organ-building to be very clear about the constructional challenges. Perhaps the 1868 patent was a somewhat convenient way for Barker to transfer the technology to his licensee. The provisional specification has six pages and is without even the simplest drawing. On the other hand, and unusually, the full specification is much more detailed, running to 12 pages and accompanied by three sheets of drawings. This was surely the *modus operandi* for the transfer of technology, to be secured by the Monarch's *litterae patentes*.

As with most electric organ patents, Barker first promotes his invention as an improved means of combining electric and pneumatic apparatus for:

> suppressing the mechanism which in the ordinary method of building connects the keys with the pallets of the soundboards, by which means the construction of large organs is considerably simplified, and the frequent derangement of the action is avoided; great facilities are also afforded for placing the keyboards at any required distance from the instrument, and a light and uniform touch is secured.

Secondly, Barker describes the use of electricity for combining or coupling the claviers; thirdly, the application of electro-magnetic agency in place of mechanical means for the draw stop actions; fourthly, the use of electro-pneumatics for 'opening and closing the large valves [ventils] which admit or intercept at the pleasure of the player the wind of certain wind chests' (does this not demonstrate Cavaillé-Coll's influence on Barker?) and fifthly, he places the battery of cells on the top of the bellows, but with the electrodes fixed from above so that they are automatically removed from the electrolyte jars when the bellows deflate: 'thereby to diminish the expenditure of metals and chemical substances therein employed'.

The electro-pneumatic system for pallet operation is shewn in Figure 11. The quality of the draughting is quite excellent and is surely in Barker's hand. The single pneumatic motor (Barker lever) is opened and closed by a single compound inlet-outlet valve actuated by a horseshoe magnet. The design for both operation and for subsequent maintenance work is elegant in its simplicity, a reminder that such is the stuff of nineteenth-century engineering genius.

The electromagnet coils are about 4 in (102 mm) in length, surrounding soft iron cores of 0.5 in (12 mm) diameter. Assuming that the drawing is to scale, we compute the diameter of the magnet coils as 43 mm. (1 3/4 in). The magnet is suspended from the table so that the armature falls by gravity from the magnet poles when the clavier key is released. As with all pneumatic motors, the speed of opening is dependent upon the wind supply pressure, the effective area of the compound valve and, in its early stage of movement, its linear movement (i.e. the distance it moves away from the seat). The speed of closing is similarly dependent on the dimensions of the compound valve and its movement, but very importantly, the difference in pressure between the inflated motor and that of the external atmosphere - a further parameter that gives the organ-builder an opportunity to enhance the pressure difference, and thereby the speed of closure through the application of a sub-atmospheric pressure. This technique effectively doubles the closure pressure difference and is the reason for the Bryceson firm's use of an exhaust bellows for its electric action and traditional organs.[62]

---

62. Edwards, C. A., *Organs and Organ Building* (London: 'The Bazaar Office', 1881), pp. 78-9

A Electromagnet armature
C Wind-bar
D Disc-valve
M Horseshoe electromagnet
P Pneumatic power bellows
R Push-rod

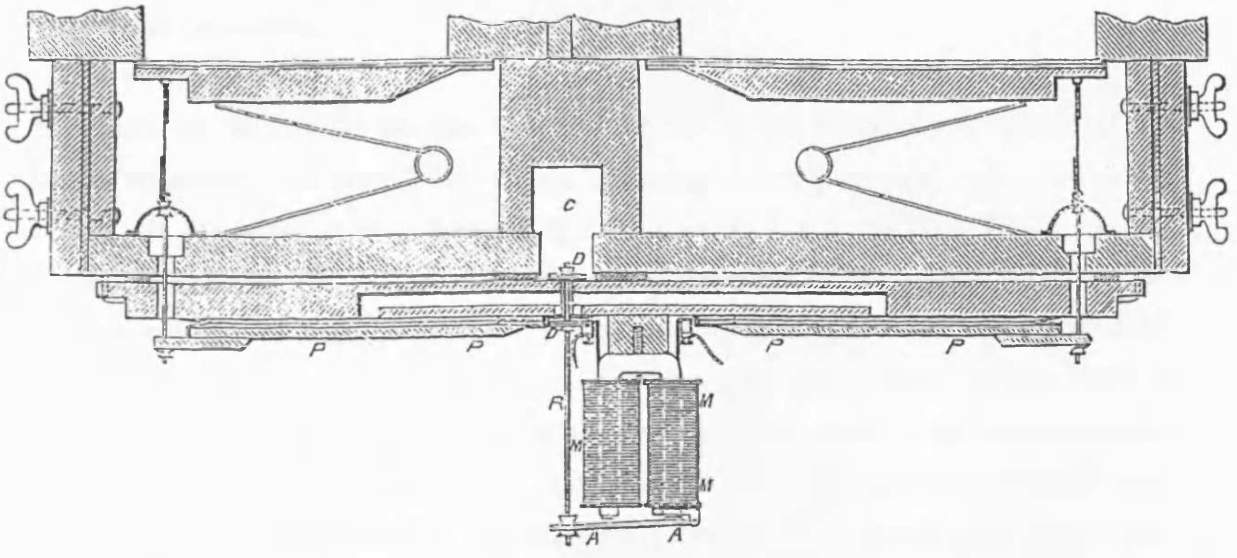

Figure 11 Barker's electro-pneumatic pallet action
(Figure 1of Sheet 1 of Patent No. 232 AD 1868)

Figure 12 shows the electrical contact design for the clavier keys and pedalboard. Barker employs pots of about ½ in (12 mm) diameter and ¾ in (19 mm) deep filled with mercury. The pots were blind holes drilled in boards of hard and dry wood. Electrical contact with the mercury was made by dipping copper points fitted to the backfalls of the clavier keys into the pots. There were additional copper points and corresponding pots for the electrical coupling of the claviers. There is nothing here that Goundry had not proposed in 1863 except for the engineering detail based on day to day operation.

In Figure 13, 14 and 15 we see Barker's device for the drawing and retiring of the drawstop sliders. His description of this innovation is very detailed, with some three pages of the specification devoted to this part of the invention. Again, Barker provided far more than is necessary to substantiate his claims. Each drawstop rod carries two hinged metal catches. As the stop knob is drawn, the left hand catch pivots the crank lever in a clockwise direction until the copper contact point is immersed in the mercury pot, thus closing the electrical circuit to an electromagnet, *vide* Figure 13. As the drawstop is further drawn, the left hand catch passes over the crank lever, which allows it returns to its resting position, breaking the circuit as it does so. The right hand catch slides over the right hand crank lever without its position being affected. When however the drawstop is retired, the right hand catch pivots the right hand crank lever in an anti clockwise direction, thus having its contact point briefly immersed in another mercury pot, and making an electrical circuit to another magnet, *vide* Figure 13. The momentary electrical contact time is long enough (less than a second) to ensure that the electromagnets carryout the tasks assigned to them with the minimum drain on the power-supply.

The mode in which the electromagnets operate the powerful double wedge bellows that move the soundboard sliders is shown in Figure 14. The design of the pneumatic control system appears to be complicated compared to the system pioneered by Cavaillé-Coll. As we have seen, the drawing of a stop knob actuates the electromagnet *G.* Immediately, the magnet's armature *g* is locked into the closed position by the latch *h,* and the current is automatically switched off as

B back fall attached to the clavier key

b copper plate

c copper contact points

C hard longitudinal board

d cylindrical mercury cups (pots) approx ½ in dia.,¾ in deep
(one pot for each clavier plus an electrical supply pot)

2 copper wires connected to the action electromagnets

*2** copper wire connecting each pot to the power supply

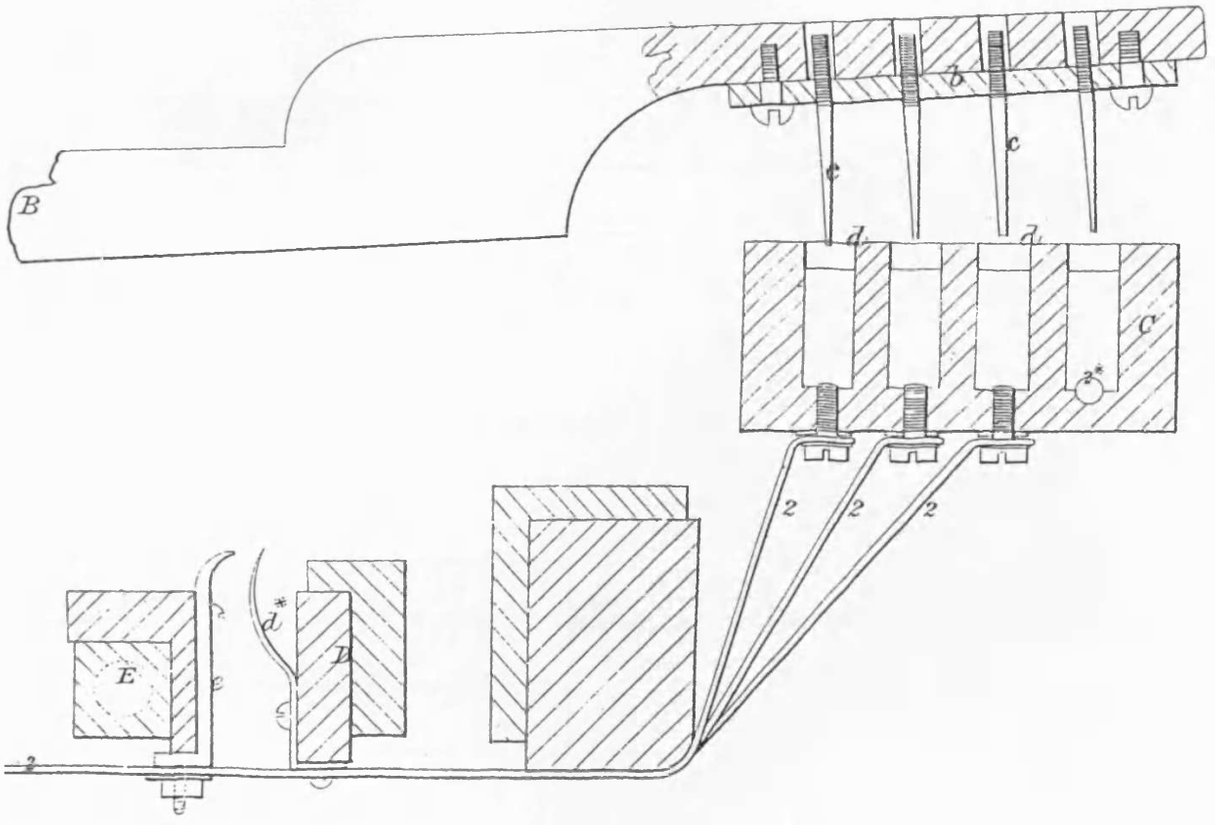

Figure 12 Barker's Mercury pot key contacts
(Figure 2 of Sheet 2 of Patent No 232 AD 1868)

*A** Drawstop rod
K Transverse bar
k Mercury pot
*L L** Insulated crank lever
*M M** Metal catch

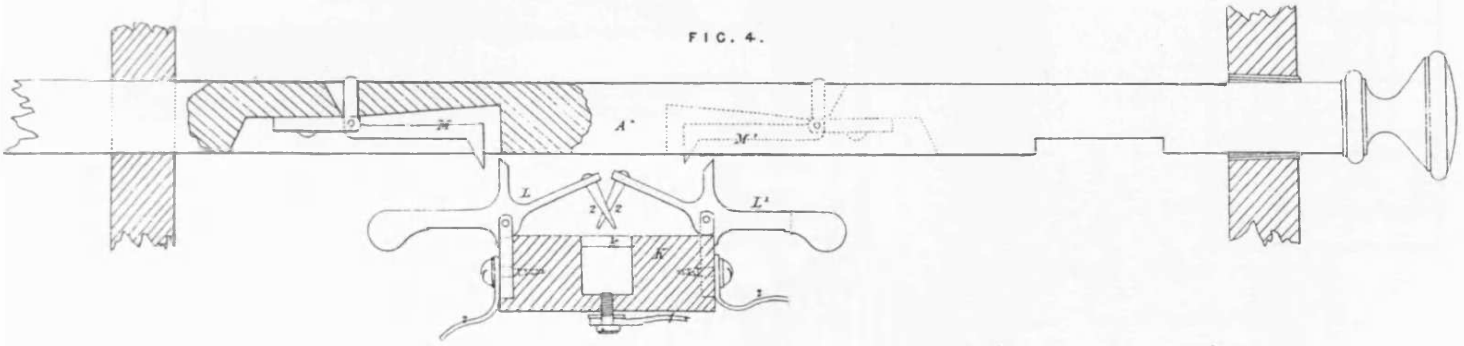

Elevation view

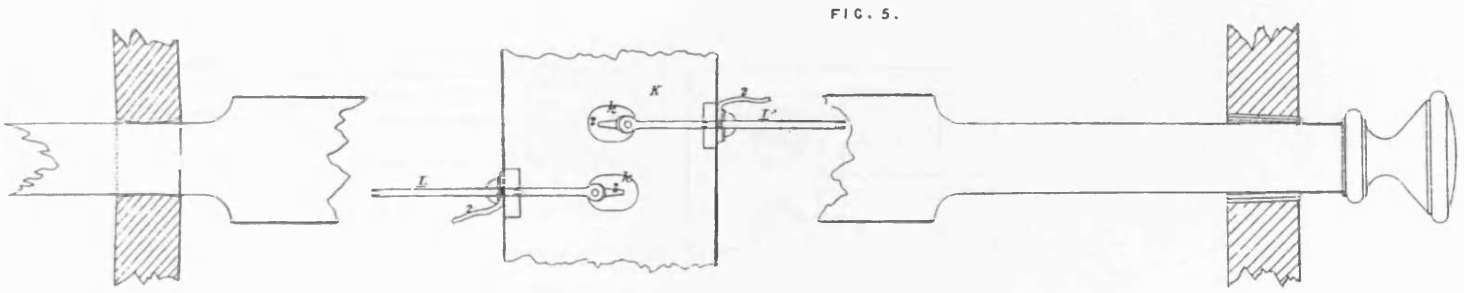

Plan view

Figure 13 Barker's drawstop with its electrical connections
(Figures 4 and 5 of Sheet 3 of Patent No. 232 AD1868)

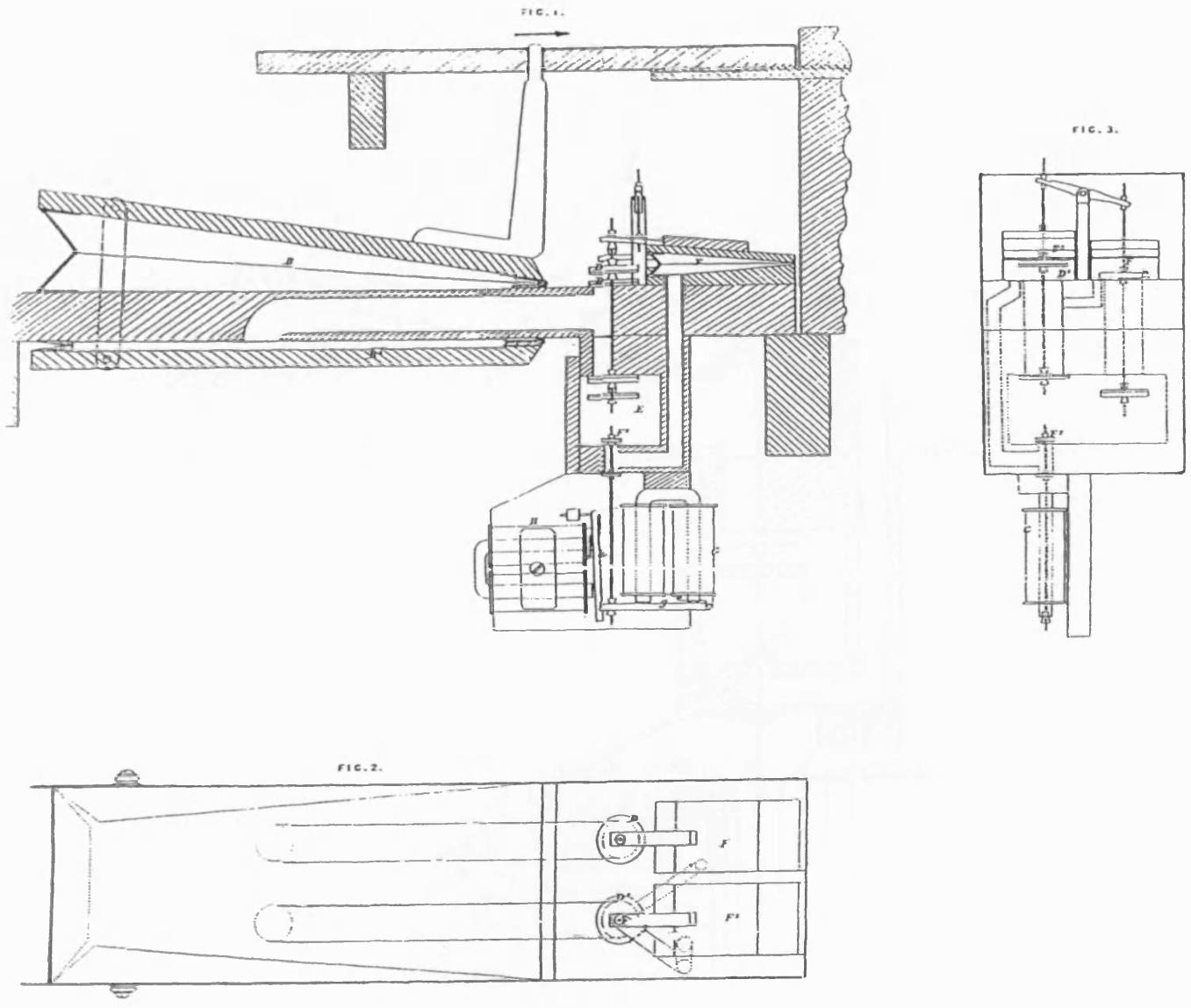

Figure 14 Barker's pneumatic motor for the movement of the stop sliders
(Figures 1, 2 and 3 of Sheet 3 of Patent No. 232 AD 1868)

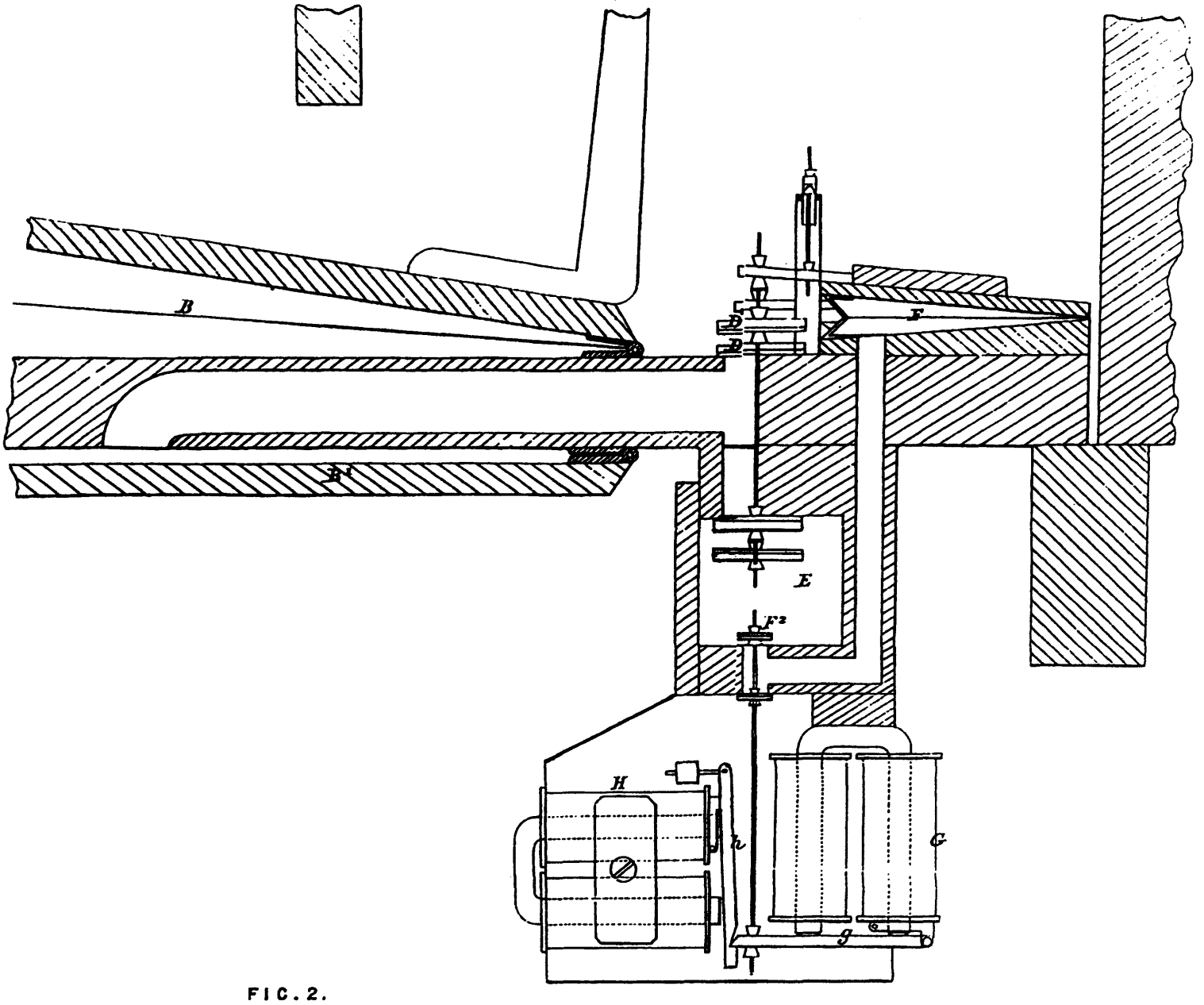

FIG. 2.

Figure 15 An expanded view of the double electromagnet latching system shown in Figure 14

described above. The disc valve F^2 attached the armature by the rod *h* is opened, allowing wind from the wind box *E* to inflate a small wedge bellows F^1 [it is incorrectly marked *F* on Barker's elevation view Figure 2 of Sheet III of the patent specification]. The air supply valve F^2 remains open until the drawstop is retired, at which point the latch magnet is momentarily energised, so releasing the latch, allowing the valve F^2 to shut and thereby causing the wedge bellows to vent to atmosphere and close.

The double disc valve D^1 attached to the wedge bellows F^1 opens the wind supply to the main slider power bellows B^1 at the same time closing the bellows' vent to atmosphere. The two small wedge bellows are mechanically connected such that the closure of one opens the other, *vide* the side elevation view in Figure 14. So, as the slider power bellows is opened, the wedge bellows *F* inflates, opens double disc valve *D* to atmosphere and closes off its air supply from wind box *E*. Barker applies the same method for the opening and closing of ventils for supplying wind to specific groups of stops on the soundboards. This is the first time in the patent literature that this eminently sensible approach to battery life is understood and resolved. (Gauntlett and Goundry did not address the issue because they had no experience of day to day electric organ use and were therefore unaware of the longevity of batteries under the demanding and varying power supply conditions required by the routine playing demands of a church organ. Barker had, at the least, the advantage of almost two years of day-to-day operating experience from the St-Laurent organ, a two clavier and pedal instrument of 28 stops). [63]

Perhaps the most significant information that the specification gives us is Barker's description of the placement of the batteries. The power supply appears to be a battery of cells, (*vide* Figure 16), whose geometric configuration resembles that of the bichromate single fluid cell first conceived in the early 1840s. Each cell has a centrally placed sacrificial zinc anode (- pole) on either side of which is an inert carbon cathode (+ pole). The electrolyte is a solution of potassium bichromate in sulphuric acid.

---

63. Miller, Georges Laing, *Revolution recente dans la facture d'orgue,* translated by G. Bédart (Paris *c.* 1915), p. 31

Note the series connection of the two single fluid cells.

The central electrode in each cell is a sacrificial zinc bar, the two outer electrodes are carbon bars.

The cells are mounted within security containers.

At the start of blowing, the cells are raised up so that the electrodes dip into the electrolyte and the battery becomes active. The converse takes place at the finish of blowing.

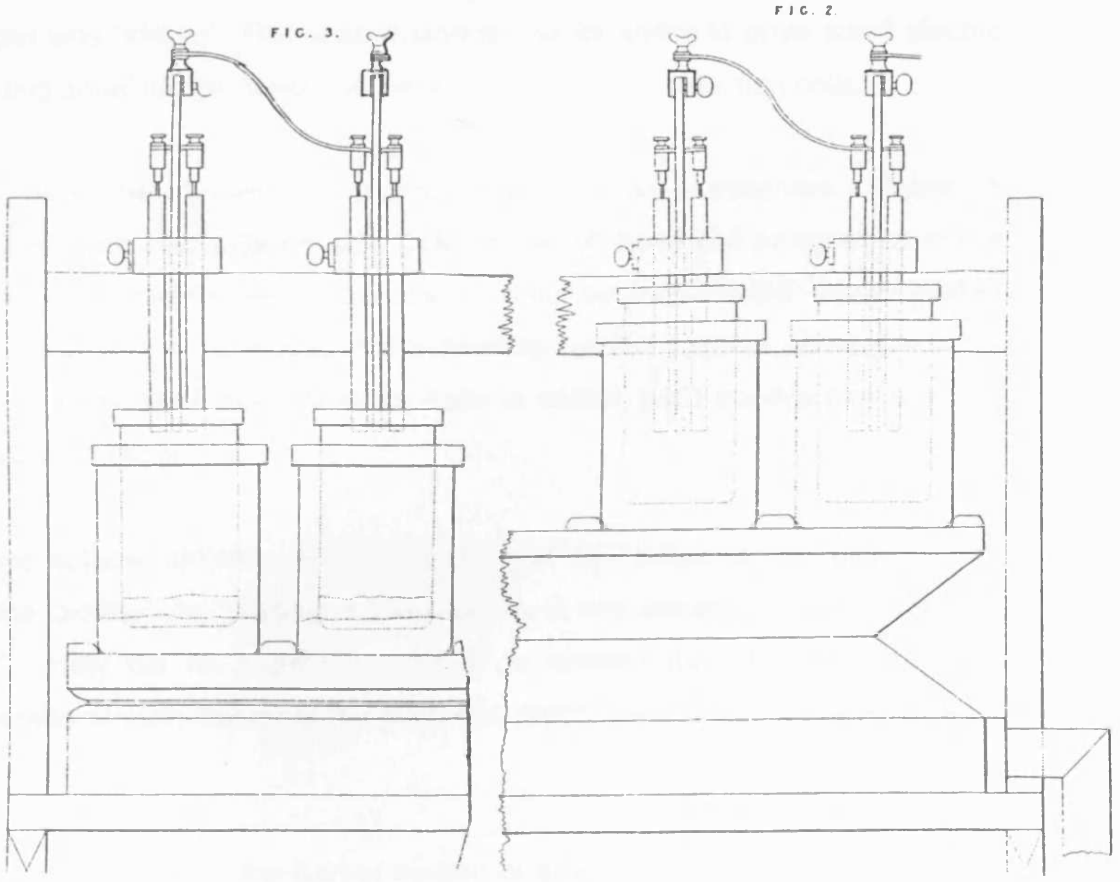

Figure 16 Barker's mounting of two bichromate cells on the top of the wind reservoir
(Figures 2 and 3 of Sheet 1 of Patent No. 232 AD 1868)

(alternatively, a solution of chromic acid crystals in water will yield a similar electrolyte, but without potassium ions being present). A disadvantage of the bichromate or chromic acid cell is the dissolution of the zinc anode even when the cell is not in operation, with the consequent degradation of the electrolyte, so it was necessary to raise the electrode assembly out of the electrolyte jar when playing was finished. This Barker accomplished by placing the electrolyte jars on the top of a wind reservoir, with the electrode assembly attached to an overhead fixed beam. Barker would also have been aware of the hazardous and highly corrosive nature of chromic acid solutions so he placed each jar within an outer security container. The advantage, though, of the cell was its full 2 V potential and a low resistance, so the current output was 'strong'. This was evidenced by its ability to drive small electric motors, lighting small lamps (from 1880 onwards) and work induction coils.

For the first time, the concept of coupling cells in series is observed. Figure 16 shews two cells with the negative zinc pole of the left hand cell being wired to the carbon positive pole on the right hand cell. I cannot be sure whether Barker limited his series connection to two cells in the drawing for the sake of convenience, or whether he actually used three or more cells in series, but I believe that twin cell battery is the most likely.

There is one notable omission from an otherwise well prepared specification that promoted the facilities for 'placing the keyboards at any required distance from the instrument'. How did he expect the player to operate the swell box shutters? Perhaps he was already aware of the Bryceson firm's ideas on an hydraulic system of control.

Later on, we shall see that the Barker system of stop control had not, in fact, been applied to any of his organs in France; and that Bryceson was the first to use it for his Theatre Royal organ in 1868, with not altogether satisfactory results. Again, we must ask a question: did Barker use the traditional mechanical technology or a pneumatic system in the manner of Cavaillé-Coll? Only an indication of the disposition of the consoles of the St-Laurent, St-Augustin and St-Pierre de Montrouge in relation to the organ case would resolve this question.

The Bryceson patents

Just over three months after the publication of Barker's provisional patent in January 1868, the first Bryceson patent appeared. The inventors were Henry Bryceson, his brother John and Thomas Honor Morten (*c.*1821-1890). Morten's relationship with organ-building is shadowy. He was certainly not a partner in Bryceson Brothers and his name appears on no other occasion than in connection with the 1868 and 1869 patents. In 1851 the census places him in Amersham, trading as a chemist in the High Street. The 1881 census records him as a wine merchant living in Hampstead. Later on his son, Alfred (*c.*1849-?) was to become a Bryceson partner, but in 1878 he left to form the organ-building firm of Morten and Taylor.

What was Thomas Morten's role? Did the Brycesons take him on for his expertise in chemistry, and the supply of chemicals for the electric action batteries? If so, it is odd that the 1868 and 1869 patents do not make any specific reference to battery technology. Perhaps Morten had a source of mercury for the electrical key contacts. The second patent, for which Morten was again a co-inventor, refers to the need for access to the mercury pots for replenishment, but otherwise the justification for his input to the Brycesons' inventions remains tenuous.

The two principal improvements in the 1868 patent are firstly, an improved soundboard pallet for lightening the touch when either mechanical or electrical action is employed, and secondly, an electro-pneumatic drawstop action that avoids the complicated design of the patented Barker system.

The improved pallet is, in essence, a simplification of the traditional Barker pneumatic lever where the moving board of the wedge shaped pneumatic motor is connected to the pallet by a pull-down. Bryceson does away with the moving board and pull-down, using instead, the bottom surface of the pallet as the moving board of the motor, *vide* Figure 17. Such is the simplicity of engineering genius that dispenses with the levers, valves, vents and other paraphernalia of the tubular-pneumatic era.

a Pallet
c Pallet spring
d' Exhaust duct that is connected to atmosphere or attenuated air when the bottom disc valve is opened, thus pulling down the pallet

f Transverse wind box that supplies wind to the underside of the pallet when the top disc valve is open, thus holding the pallet closed.

f' Wind supply to the wind groove
g Double disc valve
h Transverse box open to atmosphere or an attenuated wind reservoir

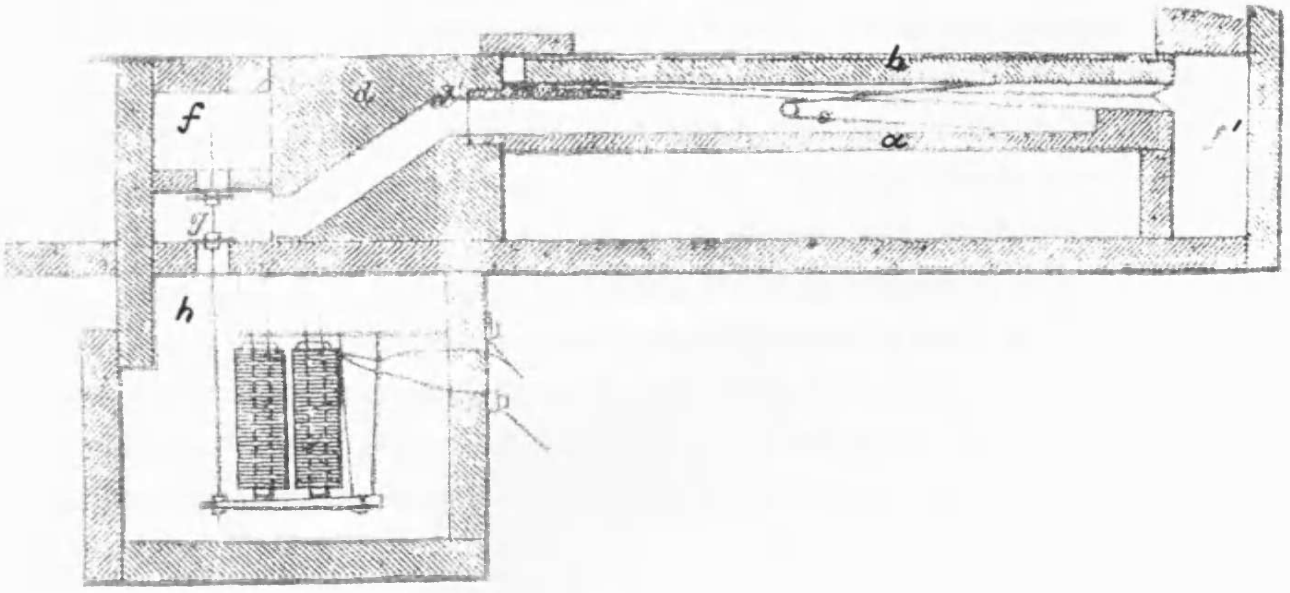

Figure 17 Brycesons' pneumatic pallet
(Patent No. 1149 AD 1868)

As always though, genius has its disadvantages. The Bryceson 'pneumatic' pallet could only be installed inside the soundboard, not externally as with the Barker - Cavaillé-Coll and Barker electric action approach. Although Bryceson had designed a pallet that could be easily withdrawn and put back without misalignment, a potential disavantage was the impossibility of obtaining access for *in situ* adjustment under normal operating conditions. Bryceson certainly used the pneumatic pallet for his organs at Rugby School Chapel, the Pro-Cathedral in Kensington and the 1885 International Inventions Exhibition organ, and no doubt there were others. More surprisingly, no other organ-builder appears to have taken up the system, even after the patent had expired in 1882.

We have already seen the complex nature of Barker's drawstop invention. The Brycesons, who had licensed the technology, clearly thought the same as the second principal invention described in the 1868 patent, makes due reference: 'the next improvement relates to a novel combination and arrangement of pneumatic power bellows and electro-magnets for working the sound board slides, by means of which improvement much complicated mechanism is avoided'. Clearly, a reference to the Barker system, since no such system had hitherto been patented elsewhere. Henry Bryceson, in his address to the Society of Arts on Wednesday 23 December 1868, stated that Barker's patented stop system was based on theory and 'imperfect experiments' and had not actually been used for the three electric organs already erected in France.[64] Bryceson, though, had used the system with not entirely satisfactory results for the first electric organ to be built in England: that for the Theatre Royal, Haymarket.

Of the two lesser claims, Bryceson's third claim concerns the way in which combination movements of the stops are achieved, and the final claim concerns a method for indicating the position of the soundboard slides to the player. These are solutions, albeit primitive, to challenges that are difficult to appreciate by organists today who are accustomed to the advantages of solid-state technology, digital read-outs, powerful

---

64. Bryceson, Henry, 'Description of the Electric Organ', *J. Soc. Arts* 840 (London: 25 December 1868), p. 90

slider magnets with a pull of 5 kg and electric motor car windows. Figures 18, 19 and 20 refer to the various systems.

The Brycesons' second patent of February 1869, again with Thomas Morten as a co-inventor, has six claims:

1. A system for ensuring that the slider electromagnet current is on long enough to complete the slider movement no matter how fast the player drew and retired the stop knobs. Also, on starting the blowing of the bellows, a device to ensure that the position of the stop knobs corresponded with the slider positions.

2. An hydraulic system for the operation of the swell box shutters.

3. The use of hydraulic cylinders for operating the combination system.

4. Access to the mercury pots for replenishment [mercury has a finite vapour pressure, and it may also splash out if the keys are depressed too vigorously].

5. An arrangement for signalling the bellows' blowers.

6. An arrangement for indicating at the console the state of the wind reservoir.

Clearly, the drawstop mechanism described in the 1868 patent, supposedly an improvement on the earlier Barker patent, was not all that it was made out to be. We see a clue in the open discussion following the presentation of Bryceson's paper to the Society of Arts that drew attention to certain deficiencies (albeit of a temporary nature) in the reconstruction of the organ of St. Michael, Cornhill, and his allusion to the imminent publication of his 1869 patent. As we might expect, the full movement of the sliders is not instantaneous, frictional forces through overtightness and humidity will slow the slider and even stop it moving altogether. Barker took care of this problem with his electromagnetic latching device. Bryceson, though, found it necessary to build in a time delay that supposedly maintained the magnet current until the sliders had fully moved. This he accomplished with a deflating electrical

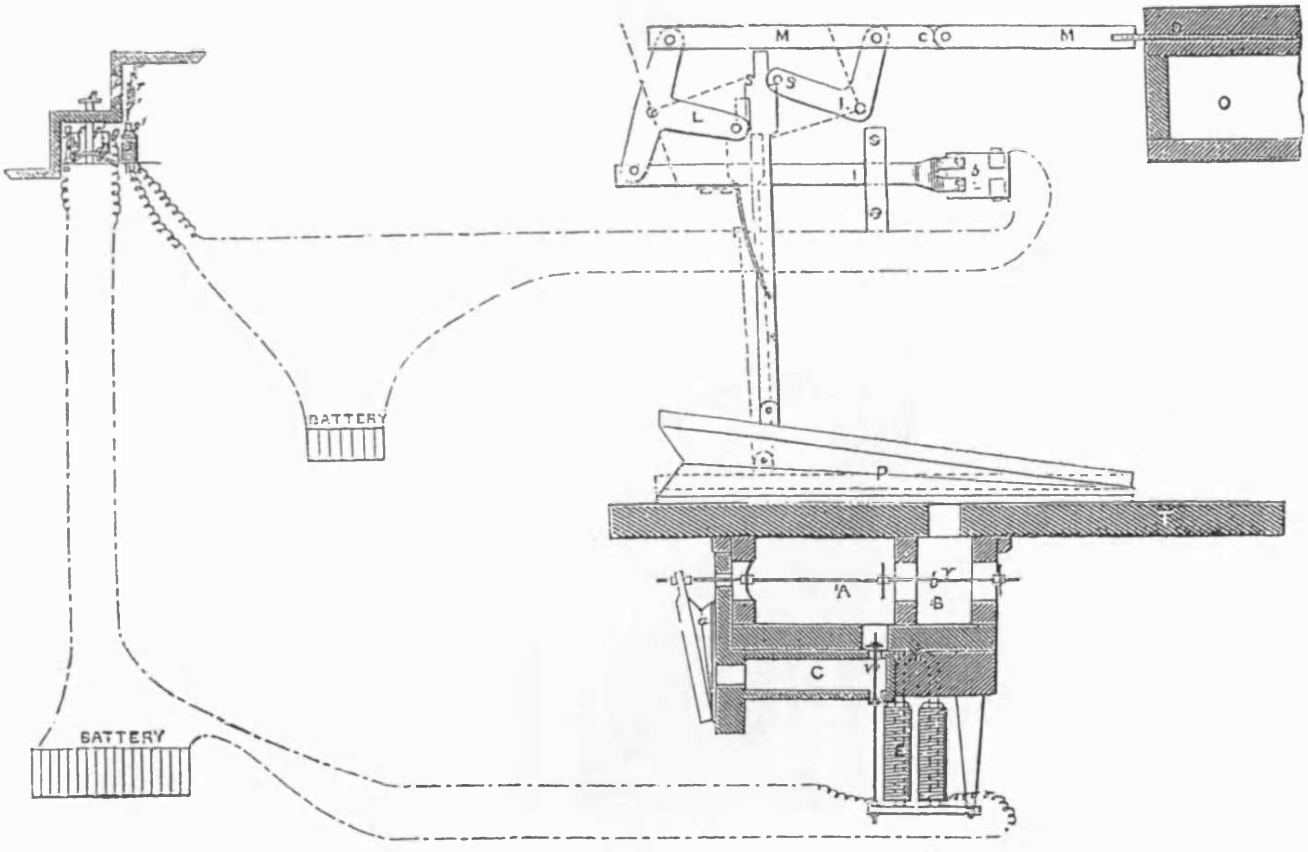

Figure 18 Brycesons' slider pneumatic motor with double touch stop control button and stop on-off indicator
(Figure 6 of Sheet 6 of Patent No. 1149 AD 1868)

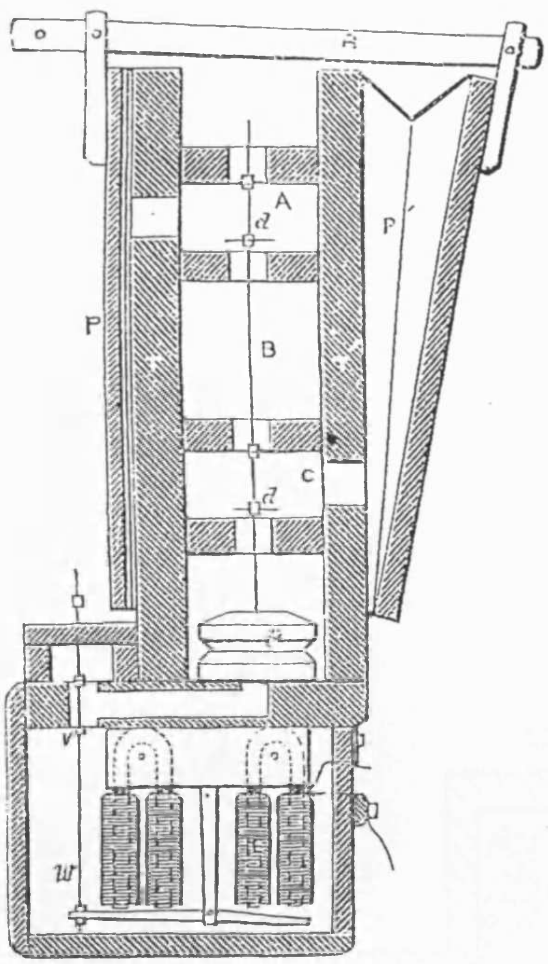

Figure 19 Brycesons' double pneumatic motor with twin actuating electromagnets
(Figure 5 of Sheet 1 of Patent No. 1149 AD 1868)

A.D.1868.April.6.N°.1149.
BRYCESON & MORTEN'S Specification.

FIG. 6.

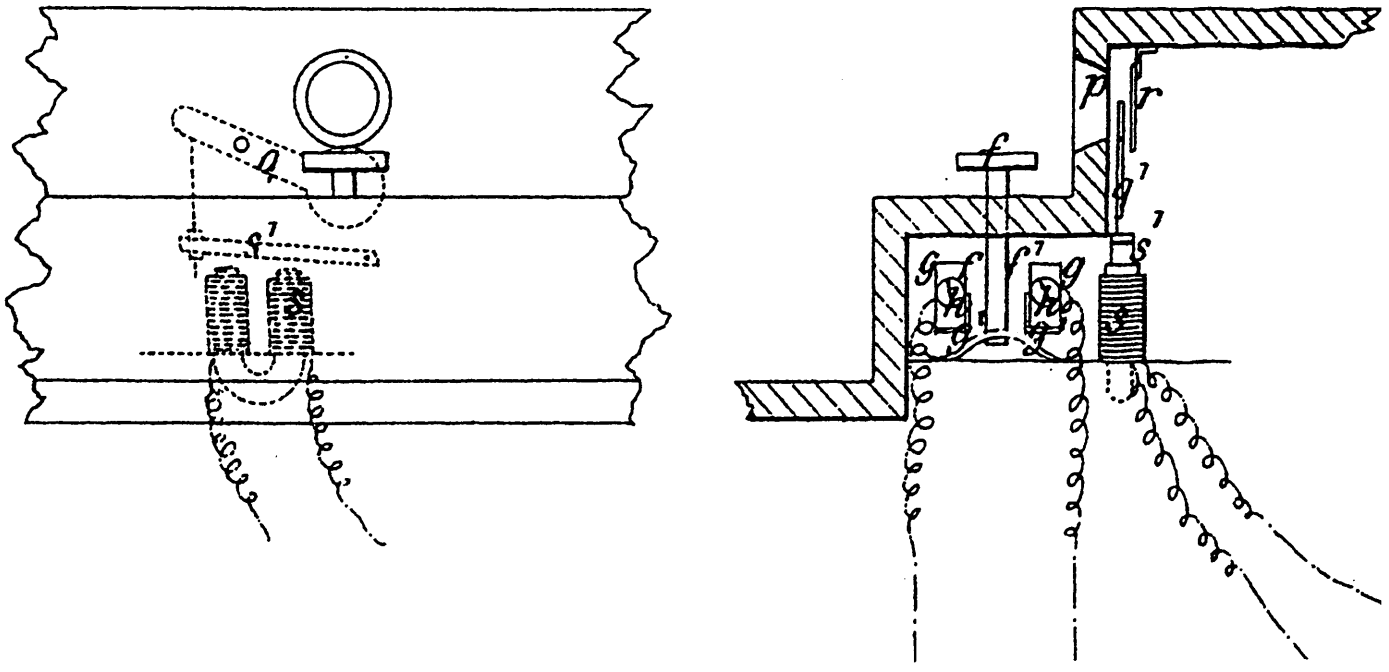

Figure 20 Enhanced view of Brycesons' double touch stop control and on-off indicator
(Figure 6 of Sheet 2 of Patent No. 1149 AD 1868)

contact bellows, the deflation speed of which could be adjusted to suit the challenges of the slider system.

Claims two and three revive the preoccupation of organ-builders with water-power. Whilst the design of hydraulic motors for wind raising had become mature technology in the hands of engineers experienced in precision metal working, the strange affinity of organ-builders for aqueous hydraulic conveyances (small bore pipes), power cylinders and control valves, stretches the imagination. Today, we have visions of water leaks, swelling timbers and damp conditions that do not fit our image of a craft based on wood as its material of construction. Nevertheless, we do know that Brycesons did build such systems for shutter control.[65]

The fourth claim is unexpected. Why should the mercury in the electrical contact pots need replenishment? There is a story about the 1886 Canterbury Cathedral organ that is relevant. Willis too used mercury pots for this, his first electric action instrument. Toby Huitson records the story of a cathedral organist in the 1930s who used to thump the keys so hard in postludes that the mercury would splash out of the pots into adjacent pots and fire off unwanted notes.[66] On a more serious note though, mercury has a very small but finite vapour pressure, so the metal slowly evaporates into the atmosphere. Now mercury is one of the most toxic metals known to man, so great care is taken today with its handling and use in manufacturing industry. We must hope that the draughty conditions of the cathedral organ loft dissipated the vapour before it did harm. Even mercury falling between the floorboards of the older chemical and dental laboratories through accidental spills caused health problems for the workers.

We cannot be but amused by the nature of Bryceson's last two claims. Whilst a piece of string attached to a brass plumb bob, with the other end fixed to the top of the wind reservoir might not be feasible for a detached console, electric telegraph technology was sufficiently advanced for simple visual indicators to be cheap and entirely reliable, and therefore much more practicable.

---

65. 'Organ News', *The Musical Standard* 421 (24 August 1872), p.114

66. Huitson, Toby, private communication, May 2003

As with most of the patents, nothing is said about the power supplies. Bryceson's drawings show only rectangular boxes reminiscent of those in Gauntlett's specification. Whilst Gauntlett, nearly two decades earlier, probably had in mind single fluid plunge batteries based on copper and zinc electrodes in an acidic solution, Hinton, who knew the Brycesons, tells the story of the 'inferno of chemical fumes' in the 'chamber of horrors' that John Bryceson had established in the attic of the firm's manufactory in Stanhope street where he developed practical batteries for the organ environment.[67] Although Bryceson may have experimented with twin fluid cells of the Bunsen and Grove type based on chromic or nitric acid, there is enough anecdotal evidence to suggest that the simple single fluid cell based on a potassium bichromate electrolyte was the preferred power supply, *vide* Section 3.4.1.

The pneumatic pallet described in Bryceson's 1868 patent, is an example of creative design that is also simple and effective. We might, with justification, describe it as a notable stage in the development of the Barker lever. We might also ponder upon the lack of interest shown by English organ-builders then as now. But then, that is the story of the Barker lever itself.

---

67. Hinton, J. W., *Story of the Electric Organ* (London: Simkin, Marshall, Hamilton, Kent & Co 1909), p. 50

Bishop's patent

Charles Kenwrick Kenelm Bishop (1850-1881) was the grandson of John Chapman Bishop, founder of the eponymous firm. His father was Charles Augustus Bishop. The grandson joined the business in 1865 and by 1867 he was earning £4 per week as a tuner. In 1870, it seems that he was sufficiently experienced to consider design improvements to the firm's conventional tracker action for large organs, a design that led to the deposition of a provisional specification at the office of the Commissioners of Patents on 14 December 1870. In essence, Bishop had reinvented Barker's pneumatic lever. At worst, it was plagiarism, at best, it suggested an inadequate knowledge of the prior art. Although the Barker lever was not much liked by British organ-builders, it was certainly known at that time. Willis's improved pneumatic lever patent had been exhibited at the Great Exhibition of 1851, so the technology had been known for nearly two decades; its latest application was at the large organ in Reading Town Hall (1870). Indeed, when Barker proposed to take out a British patent in the latter part of the 1850s, 'he found he would only be bringing coals to Newcastle'.[68] It was a good try on Bishop's part, but pneumatic assistance and tubular–pneumatic actions were already firmly established for all sorts of instruments.

Here is Bishop's recital: 'This Invention relates to certain improvements in the construction of large organs or organs having a heavy "wind pressure," the object being to secure a light touch without recourse to the complicated and expensive apparatus known as pneumatic.' Willis had already improved on Barker by designing an exhaust valve of generous dimensions in an attempt to overcome the slow release of the early version. Bishop went in an opposite direction with an exhaust valve that had half the wind release-area of his inlet valve, *vide* figure 21.

His second improvement relates to organs 'in which the pallets or valves are worked by electro-magnets'. Here truly lies Bishop's genius; he discards Barker's copper points dipping into mercury cups for the electrical key contacts, proposing instead a

---

68. Bryceson, Henry, 'Description of the Electric Organ', *J. Soc. Arts* 840 (25 December 1868), p. 83

FIG. 3.

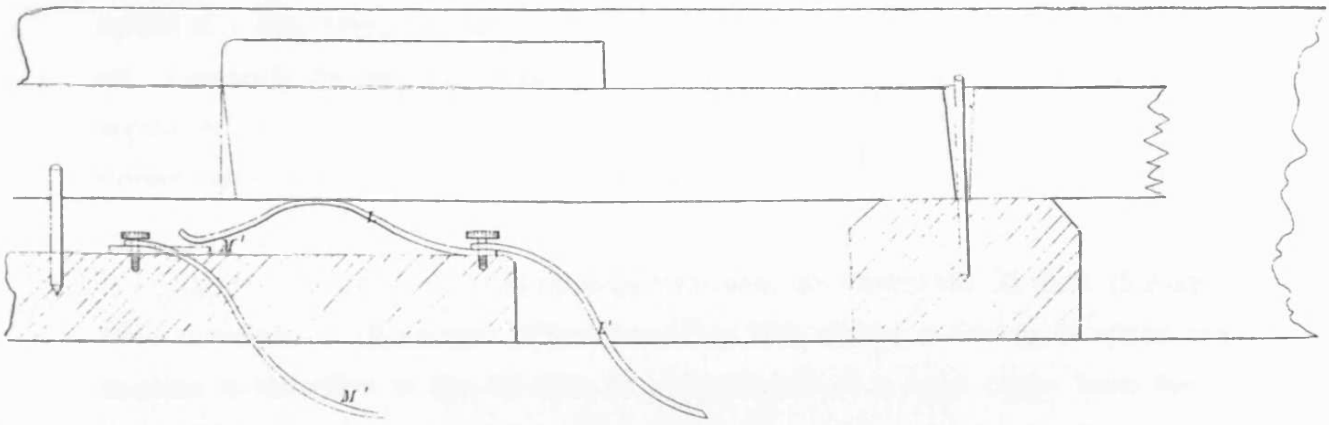

Figure 21 C. K. K. Bishop's pneumatic lever
(Figure 1of Patent No. 3279 AD 1870)

rubbing contact spring which also acts as the return spring for the key, *vide* Figure 22. This ensures 'the keeping clean of the parts of them which thus rub against one another, and ensures their proper [electrical] action,' a key contact system that became common practice for electric organs throughout the twentieth century. What Bishop does not specify are the materials of construction. Was it silver alloy wire on copper, phosphor bronze wire on brass, or some other combination?

Now it becomes clear that Bishop was aware of Barker's mercury contacts, the Barker patent and therefore the Barker pneumatic lever technology. As a London organ-builder, he must also have been aware of the seminal paper on the application of electricity, and especially Barker's work, given by Henry Bryceson Jnr to the Society of Arts on Wednesday 23 December 1868. I think that we may safely say that C. K. K. Bishop decided to anticipate future developments with a dodgy patent at a time when the patent examiner's remit did not include a search for prior art. Generally though, we have to say that the holding of organ patents did not appear to be an effective marketing tool, and, with one notable exception, that of Robert Hope-Jones, no significant profits ensued.

There is one other C. K. K. Bishop patent to note: his Patent No. 3210 of 15 August 1876 concerns a pneumatic action invention that claims a saving in space and enables a reduction in the number of soundboards of a large organ from five to three. The relevance to electric organs is brief and derogatory; 'In the case of pneumatic tubular actions, or the present unreliability of the magneto-electric action now generally employed'.

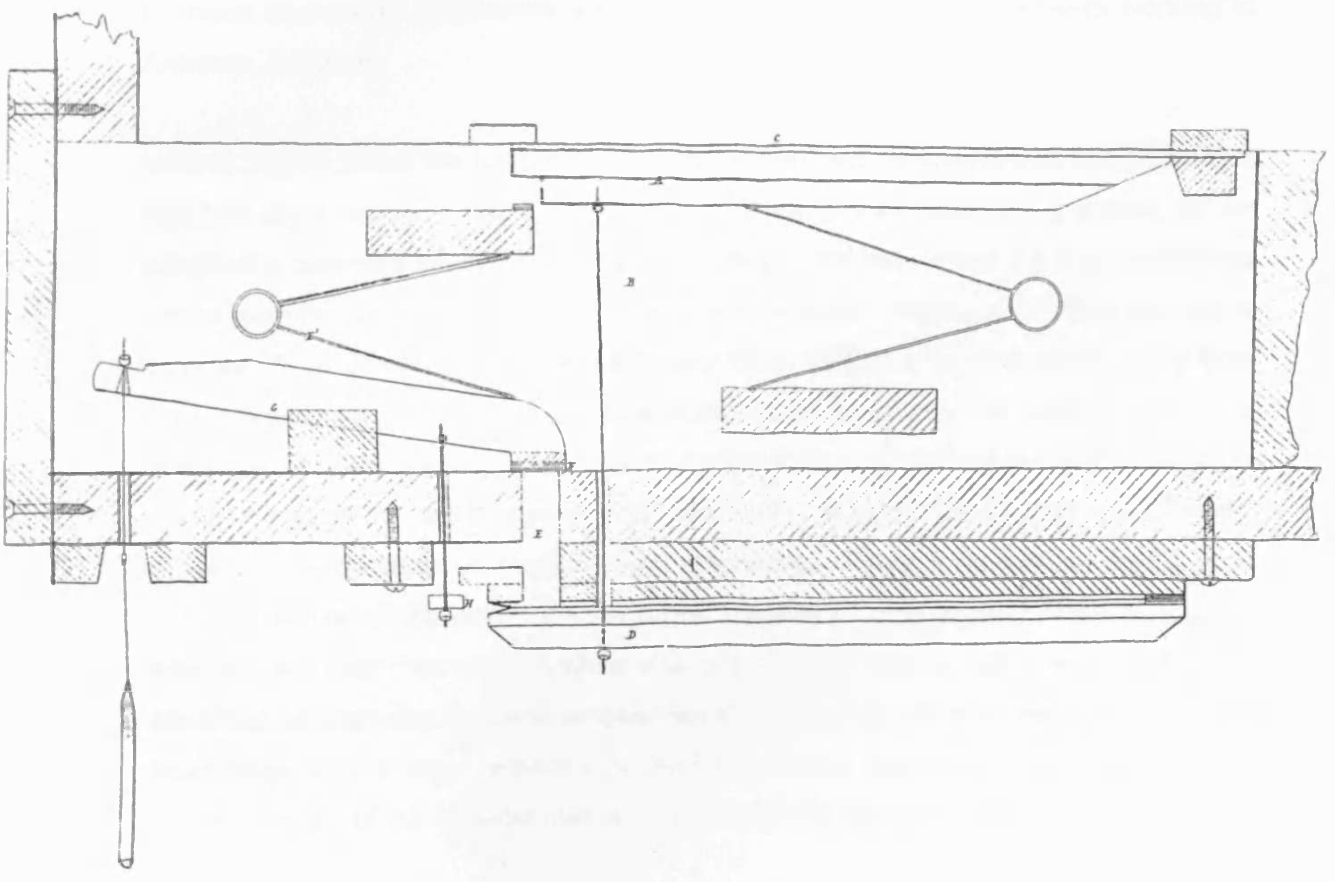

Figure 22 C. K. K. Bishop's patent electrical clavier key contact
(Figure 3 of Patent No. 3279 AD 1870)

The patents of Schmoele and Mols

On 15 July 1881 William Ford Schmoele and Alexis Mols, two US citizens, made an application for a French patent concerning an electric organ. Less than two weeks later (27 July), a similar provisional specification for 'AN ELECTRICAL MUSICAL INSTRUMENT' was deposited with the Commissioners of Patents in London and few days after that, a further specification, dated 4 August, was deposited in London. In these documents, Schmoele and Mols, were described as engineers working in Antwerp, Belgium.

Little is known about the background of the Americans. It seems that two Schmoele brothers were active in the US during 1876 when they took out a patent for an electrically operated player piano where a paper roll was 'read' by electromagnets whose signals were then used to activate pneumatic motors controlling the piano hammers.[69] Some time between 1876 and 1881, William Ford Schmoele and Alexis Mols travelled to Europe and set up a business in Belgium. The main thrust of the British and French patents (the French *brevet* discussed further in Section 3.3.2) is the automation of reed organs (American and *Alexandre/expressif* instruments, known as harmoniums in England) and pianofortes. There is no mention in the texts of the invention's application to the *orgue d'église* or pipe-organ. From all this we may assume that Schmoele & Mols was not an organ-builder but a manufacturer of electrical engineering systems whose intention was to profit from the licensing of its technology to the manufacturers of reed organs for the home and chapel, a fast growing sector of the musical instruments industry in the decades up to World War I.

The preambles of the British patents are succinct: Patent No. 3294 says 'This invention relates to an instrument which may be played by a keyboard of its own, or which may be applied to a piano, and be caused to play upon the same automatically. In the former case it acts as a reed instrument alone, in the latter case the music of the piano may be produced alone or be combined at pleasure with

---

69. US Patent No. 123456 (1876)
Dyer, Julian, *History of the Pneumatic Player Piano System* (21 January 2002).
http://mmd.foxtail.com/Archives/Digests/200201/2002.01.20.06.html

that of the reed notes. It is mainly intended to serve the latter purpose'. Patent No. 3386 appears to be concerned with small cabinet or house organs of the 'orchestrion' type, and the preamble reads, 'This invention relates to improvements in the application of electricity to organs, whereby they may be played by hand or automatically by specially designed sheets of music. The wind-pressure provides the working power, and the electricity times and regulates its application'. The invention also covers the playing of drums, cymbals, triangles, small bells etc that may form part of the organ.

It is not intended to provide any explanation in this work of the mechanisms of such types of organ except where the Schmoele & Mols new generation of low electrical power technology bears on traditional pipe-organ actions. That there are such issues is demonstrated by the later licensing of the system to established organ-builders in France, Germany, Spain and England, and it is for this that historians remember the two Americans, not their work with reed organs, orchestrions or automated pianoforte actions. For the organ-builder the most important aspects of the patents are the design of the electromagnets and associated power motors. There is also useful information, (though not necessarily new), relating to clavier contact design and the preservation of the life of the batteries.

Patent No. 3386 contains significant material that reinvigorated the development of electric action in Europe following Barker's enforced departure from France in 1870. In particular, we should note the design of the horseshoe electromagnets, the cores of which were made from iron tubing (*vide* Figure 23) that allowed one leg of the horseshoe to be used as a duct for wind, thus simplifying the design of the mechanism and allowing the electromagnets to be placed within rather than without the soundboard. The most important feature of the design, however, was the armature assembly. It was of very lightweight and without any transmission rod or lever. The inertia of the assembly was therefore very low compared with the Barker system, and required only a small magnet for its operation, *vide* Figure 24. According to the patent specification, the energy required was less by a factor of 'thousands'. There was a disadvantage, though: the air flowrate through the valve was too low to fill (or vent, depending on the system) a pneumatic pallet at the speed

FIG. 7.

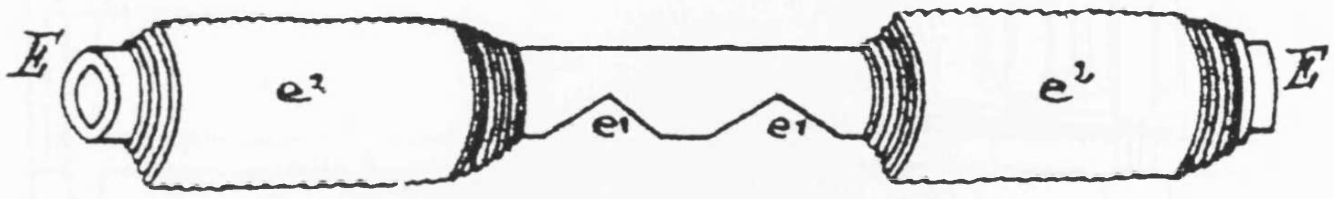

Figure 23 Construction of Schmoele & Mols electromagnet core
(Figure 7 of Sheet 1 of Patent No. 3386 AD 1881)

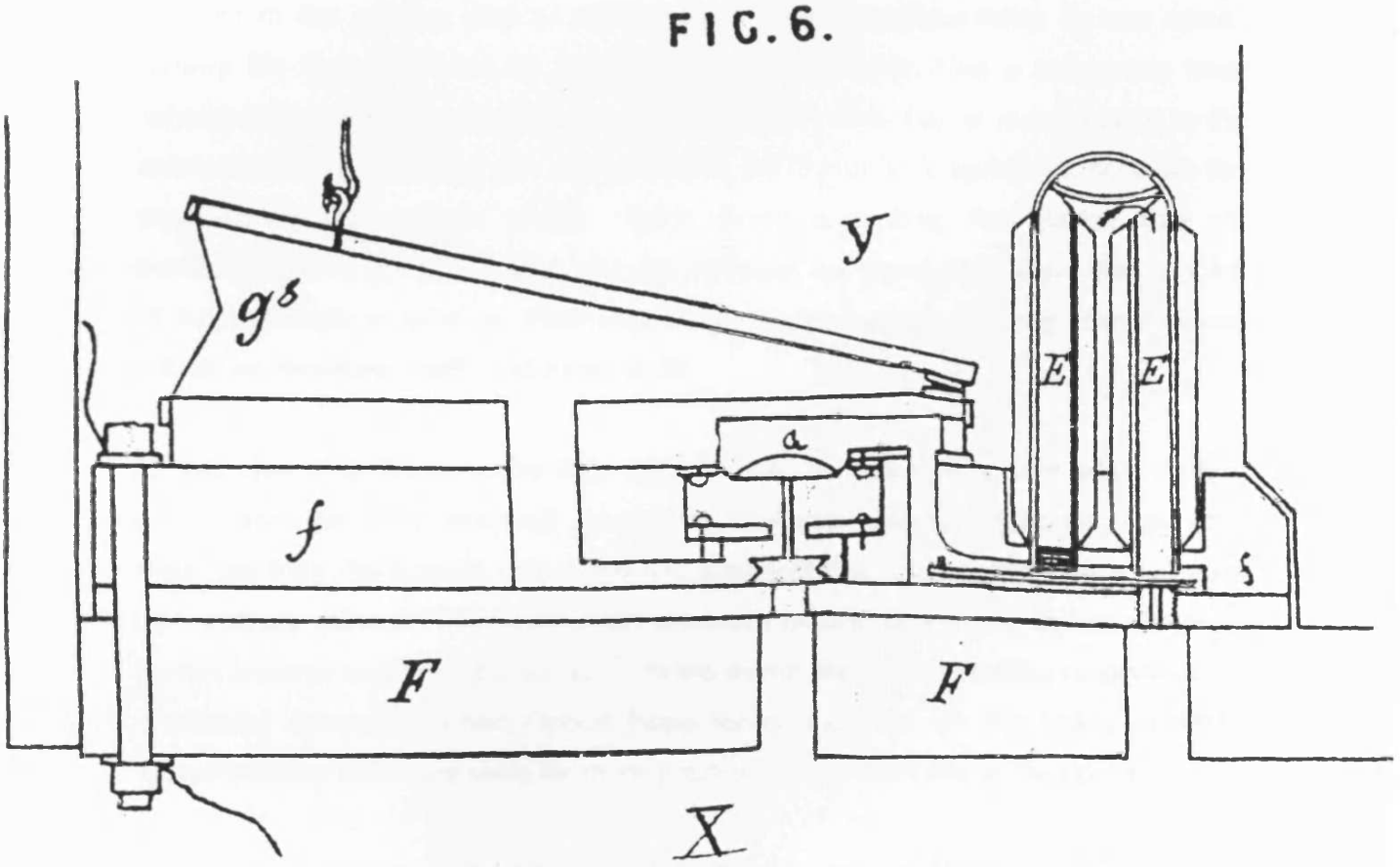

Figure 24 The Schmoele & Mols electro-pneumatic clavier action
(Figure 8 of Sheet 1 of Patent No. 3386 AD 1881)

necessary to satisfy the player, so Schmoele & Mols introduced an intermediate (primary) motor to obtain a satisfactory response time, *vide* Figure 25.

The clavier key contacts were made by coil springs attached to the underside of the keys which on depression touched a fixed contact bar, *vide* Figure 26. The inventors claimed that these contacts made no noise and represented an improvement on mercury pots that were prone to spillage. Their contacts were also superior to the rubbing wire or arrangement 'which produce more or less noise'. Battery life was protected by suspending the electrodes from a pneumatic lever 'whose movement plunges them in the exiting liquid when the air is exhausted by the exhaust bellows and they are raised out of the liquid by a spring as soon as the pressure on the bellows cease'. Again, there is nothing that Barker had not envisioned, although the mechanism for vibrating the electrodes when they are out of the electrolyte in order to disengage accumulated gas is intriguing: 'this however will not be necessary with Leclanché cells'.

All this was a quantum technology leap for electric action at a time when battery power was the only practical source of electrical energy. Disappointingly, the response from the English organ-builders was negative. Schmoele & Mols set up a joint venture with one Rhodes to offer complete electric actions to the trade, but we do not know of any business sales.[70] In the event, the trade's Luddite response only dissipated somewhat when Robert Hope-Jones appeared on the scene in 1890. Developments in France were far more positive, as we shall see in Section 3.3.2.

The drawings are not by the hand of a draughtsman and are of poor quality.

---

70. Advertisement in *Musical Opinion* 136 (1January 1889), p.157 by Schmoele, Rhodes & Co., 131 Wool Exchange Coleman Street London.

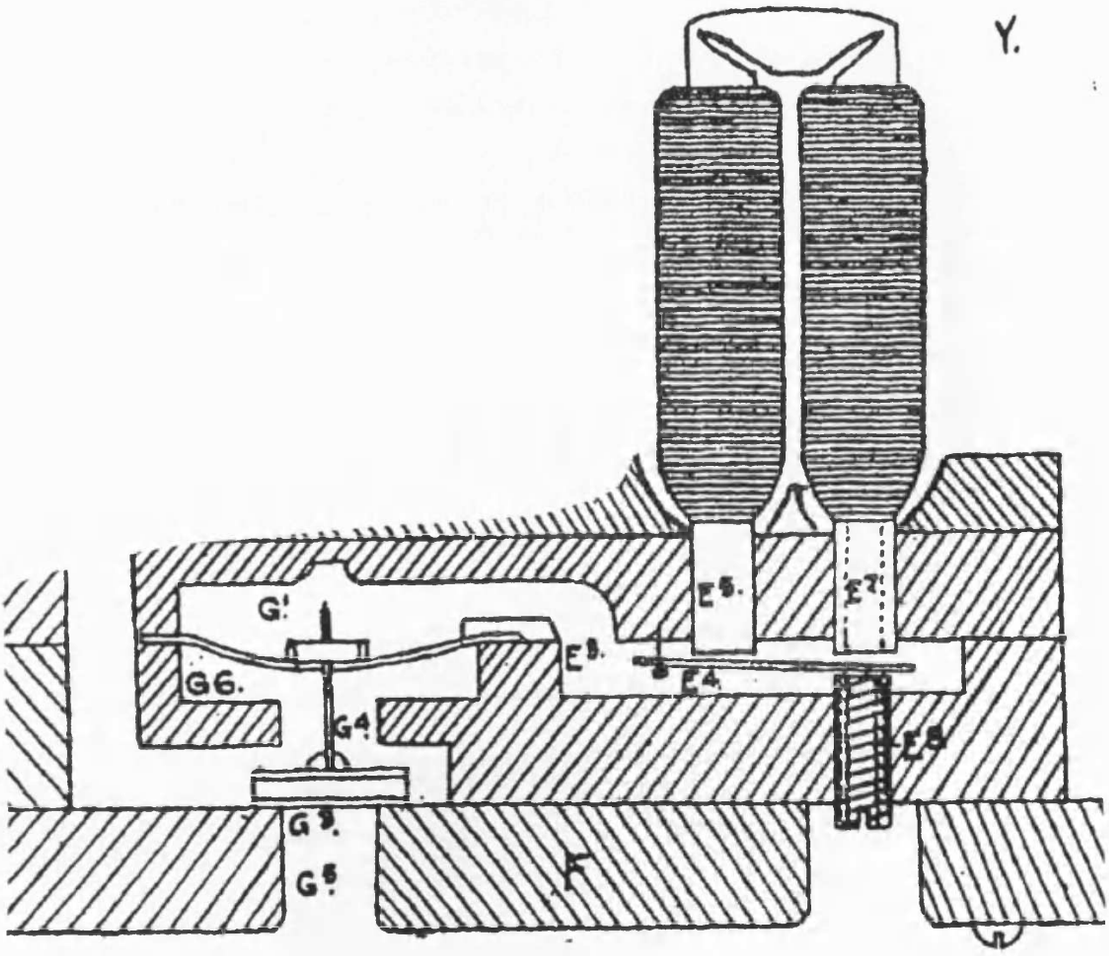

Figure 25 Larger view of the Schmoele & Mols armature assembly and primary motor
(Figure 8 of Sheet 1 of Patent No. 3386 AD 1881)

FIG. 10.

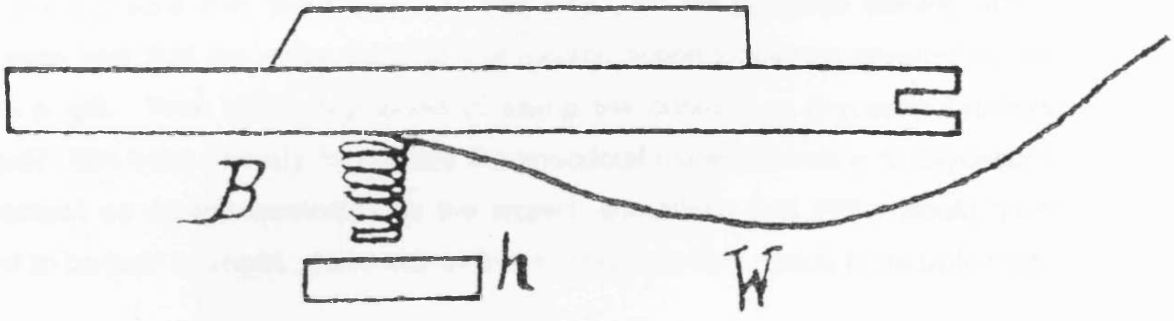

Figure 26 Schmoele & Mols clavier key contact system
(Figure 10 of Sheet 2 of Patent No. 3386 AD 1881)

The Henry Willis patent

The organ-building firm of Willis was granted 23 patents for improvements to organs during the period 1853-1897, with over half of these naming Henry Willis as the inventor. Vincent Willis contributed eight inventions and Henry Willis Jr just one invention. The only other organ-builder to be granted almost as many patents was Robert Hope-Jones with fifteen inventions over the period 1890-1901.

Henry Willis's provisional specification no. 2443 was deposited by Newton & Son, patent agent on 23 February 1885 shortly before the firm received the order for its first electric action organ: the instrument for Canterbury cathedral. At the start of discussions (as early 1884) with the Cathedral authorities, Willis had proposed a tubular-pneumatic action, but either being prompted by the Cathedral, or on his own realisation of the unusually long distance planned between the organ (in the triforium) and its console (at the back of the screen in the south transept aisle), he felt it necessary to change his proposed design to incorporate an electro-pneumatic system.[71] This he did for the same price as the earlier tubular-pneumatic proposal, whilst making sure that the Cathedral was aware of his patented electric action technology and that the extra cost for the electric action would be covered by the firm as a gift. Was Willis frightened of losing the contract to Bryceson brothers perhaps? We have already mentioned the anecdotal material relating to Brycesons involvement as design consultant to the project, something that Willis would have wanted to be held in secret. Here lies an interesting story that needs to be unfolded.

So what were the improvements and claims that were laid out in the complete specification of 23 November 1885? Surprisingly, the use of electricity was not the main feature of the patent. Rather it related to the methodology for connecting two or more pneumatic lever windchests together so that they are all brought within the control of the player through the clavier action of the first windchest (which may be mechanical or electrical). The Willis invention is based on the use of air from the

---

71. Bicknell, Stephen, 'The testament of Theresa Willis', *J.BIOS* 26 (2002), p. 42. The letter says 'it was found that up to 25 feet any advantage was with the tubular pneumatic action, and that at 40 feet it was just possible to realise that the limit of equality was thereabouts. Beyond that distance the electro-pneumatic was the quicker in response'.

groove (channel) when a pallet is pulled-down in the first windchest to actuate a pneumatic lever that pulls-down the corresponding pallet in the second windchest. Similarly, the use of groove air to operate any number of windchests is possible. Figure 27 is a simplified diagram of the invention and Figure 28 is an enhanced elevation showing the magnet detail. The preamble of the provisional specification claims that the advantages are simplification, economy of space, easy access for maintenance and the use of 'diminutive' valves and pneumatic levers. These advantages are dropped from the complete specification that merely states 'to improve the construction and arrangement of organs and afford increased facilities for the player'.

Willis does describe the type of electromagnet that he prefers 'to employ when applying electricity to the playing of organs, and I will also describe the means which I provide for minimising the electro magnetic force required in my organs'. For the first time in an organ related patent we see a reference to the use of laminated plates with interposed insulation for the magnet core to reduce 'the latent magnetism of the magnet', *vide* Figures 28 and 29. Whilst this is sound practice for large magnets, the technique was fully in the public domain at that time, for example in the construction of transformers and electric motors, and Willis does not therefore claim it as part of the invention, so why does he mention it? Perhaps he wanted to show the trade that he was up to date with contemporary developments.

There is, though, a strange claim (No. 5 in the listing): the armature of the magnet is constrained by a pneumatic cushion and a rod whose length can be adjusted with a button to position the armature close to the magnet core so that only a small amount of magnetic force will be needed (always provided that the movement is sufficient to allow the air valve to do its job, *vide* Figure 29). All this seems to be an unnecessary and erratic form of adjustment when a simple adjustable screw and locking nut would have been far more simple and inexpensive. But then this is often typical of Willis's approach to technical matters.

All the systems that we have examined so far require the use of an electromagnet for each pallet. Perhaps the most valuable advantage that this invention provides is

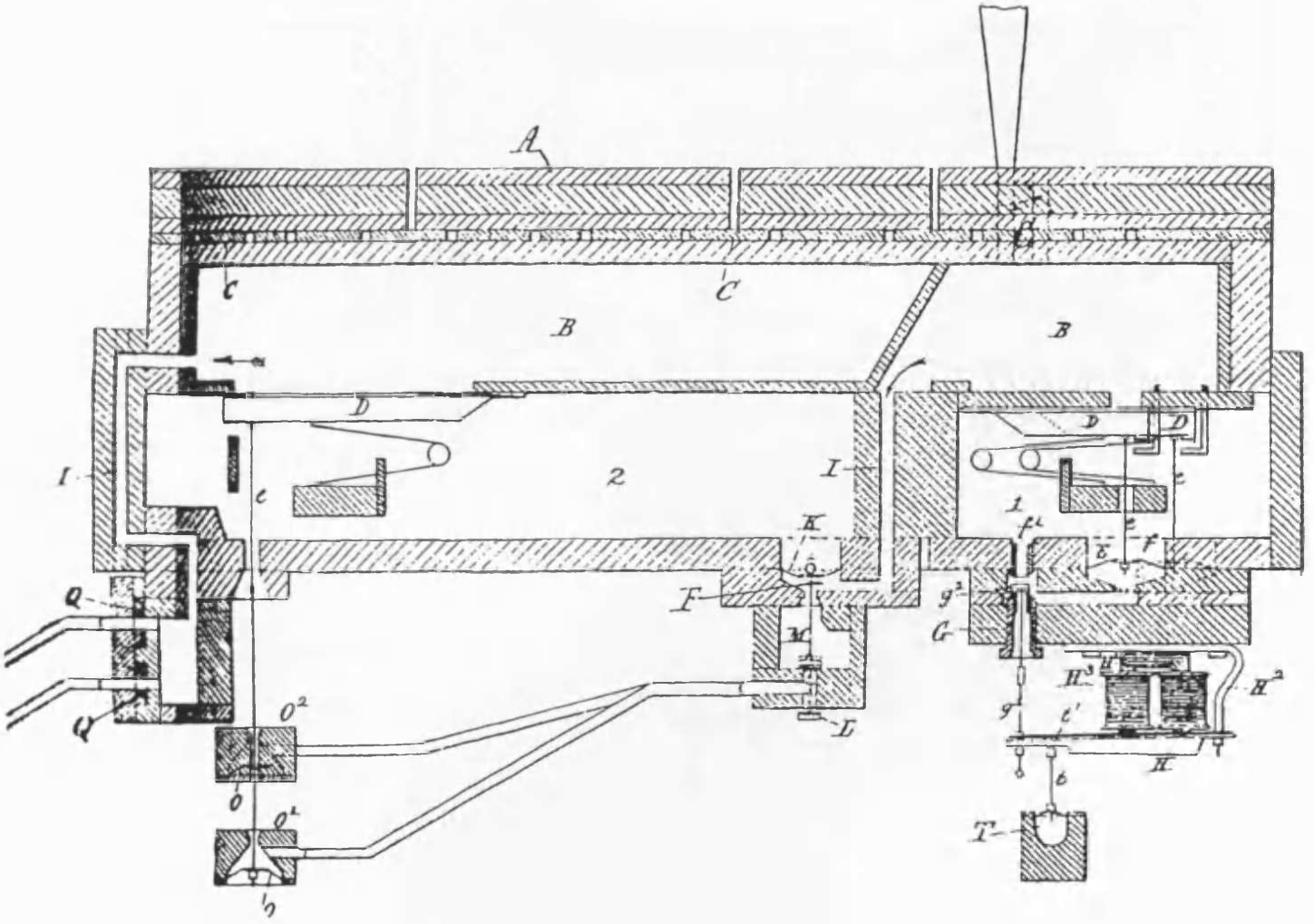

Figure 27 The Willis invention for the use of groove wind for the actuation of subsidiary windchests
(Figure 1 of Sheet I of Patent No. 2443 AD 1885)

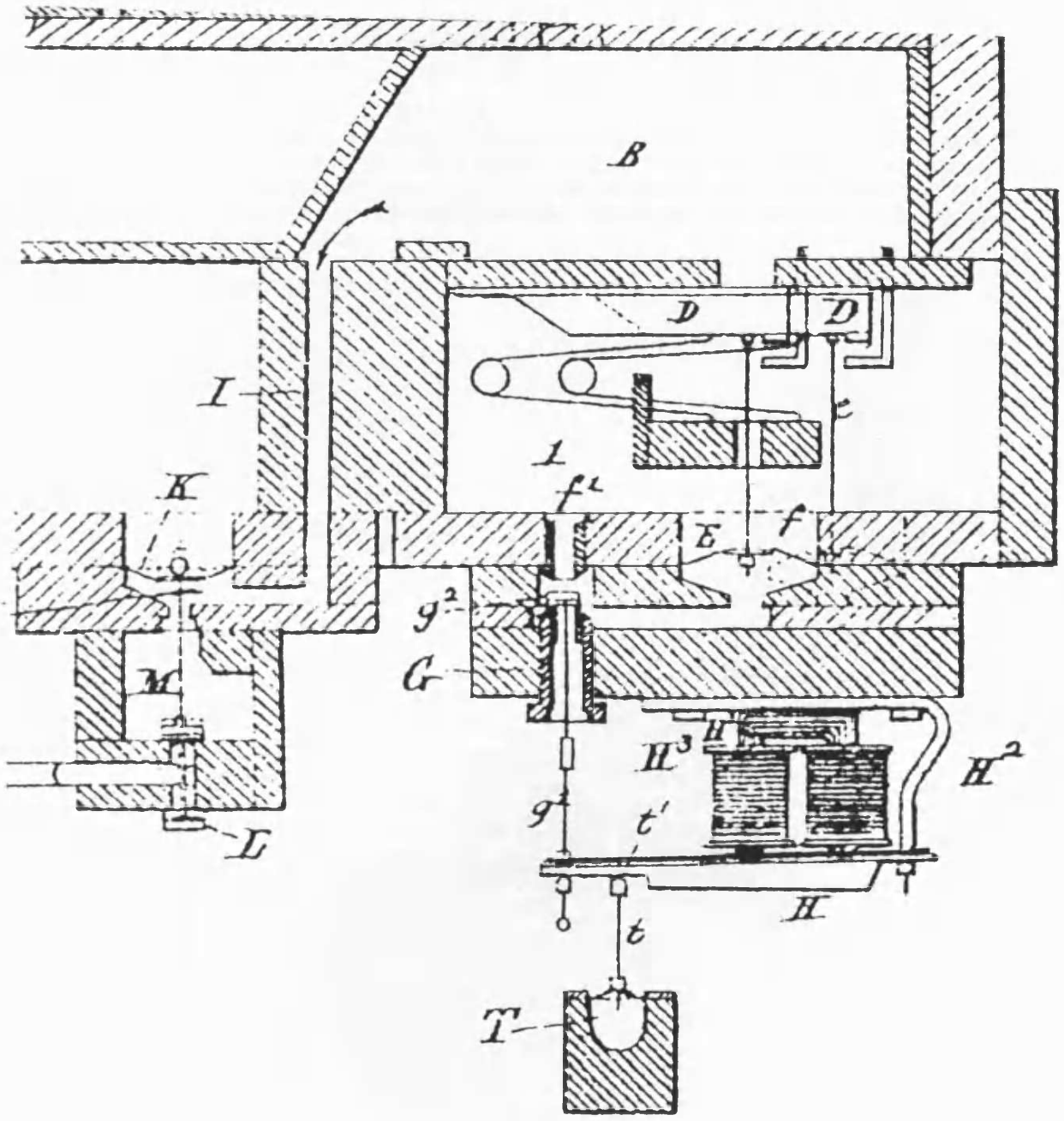

Figure 28 The Willis invention for the use of groove wind for the actuation of subsidiary windchests – an enhanced view of the electromagnet actuation
(Figure 1 of Sheet 1 of Patent No. 2443 AD 1885)

H^1 Laminated soft iron sheet core with interposed insulation)
H Armature
H^2 Armature support
H^3 Electromagnet coils (it is not clear whether the two coils were connected in series or parallel
g^1 push rod to the primary motor

It is not known whether this is the design of magnet used by Willis for the Canterbury Cathedral organ of 1886. No archeology has been found. Vincent Willis was an amateur electrician interested in developing electric action and although his father Henry Willis carried out the contractual negotiations with the Cathedral authorities, there is little doubt that Vincent made the detail design of the electric action.

The electromagnet is shewn below in full size.

FIG. 5.

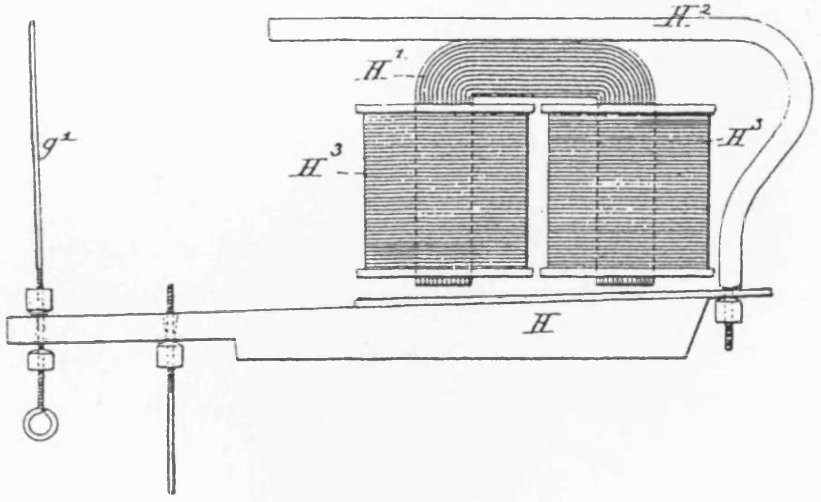

Figure 29 The Willis electromagnet
(Figure 5 of Sheet 1 of Patent No. 2443 AD 1885)

the need for only one electromagnet to control two or more pallets, depending on the number of windchests using groove air. Whether this interesting concept was ever put into practice either for the 1886 Canterbury Cathedral organ or elsewhere is not known. Certainly there are some important design aspects, for example the need to size the second stage windchest pneumatic motors for the minimum groove wind pressure that will exist when all the stop sliders are drawn in the first stage windchest. Similarly for any further stages of chests. Conversely, there needs to be a fast and reliable wind bleed from the groove when all the sliders are retired. We should also note that the pull-down motor must have a larger surface area than the associated pallet aperture for the pallet to open.

The Vincent Willis patent

A month before Henry Willis's provisional specification was lodged, his son Vincent (1848-1928), applied for a patent entitled 'An improved Mode of Making and Breaking Electric Circuits'. Although he had in mind its use for electro-pneumatic organ actions, several broader, if undefined, applications were imagined.

Typically, electric action organ keys made electrical contact at a given depression, say one-sixteenth inch (1.5 mm), with a full key depression of five sixteenths inch (8-9 mm). On the key's release, the electrical connection was broken at exactly the same point. Put another way, the key had to rise several mm before the magnet was de-energised. It seems that players had experienced a sluggish release with the Barker-Bryceson action due to the finite time required by the pneumatic motor(s) to respond to the de-energisation of the electromagnets when the keys were released. Vincent Willis therefore invented a contact system whereby the magnet was energised in the normal manner with only a slight depression of the key, but that the magnet was de-energised immediately the key was allowed to rise. In this way, the small but finite time during which the key rose, enabled the pneumatic train to complete its work and thereby avoid the sluggish response. In Vincent Willis's words: 'I am thus enabled.....to take full advantage of the wide range of movement of the key of which musicians will appreciate the importance, while experiencing none of that sense of drag which is felt in playing electrical organs, as hitherto constructed'. Here though we have the overt admittance that inevitably, the pneumatic power motors of the 1880s had a noticeably slower action than that of the associated electromagnets.

Willis's mechanism for achieving the on-off sequence is entirely mechanical although he still used mercury pots with platinum contact points, *vide* Figure 30. Today, there are reliable electronic techniques available for building in a delay period. Following my discussion with organists and after taking advice from experts in action technology, I am not convinced that the short time period gained by the Willis improvement for the pneumatic action to complete its work is significant. As with other Vincent Willis inventions, there was inherent mechanical complexity, so we may be sure that it has never been used by other organ-builders to this day.

Explanation

a clavier key
b electrical spring contact connected by a platinum point to the mercury pot and thence to the electro - magnet. b^1 is a platinum tip.
c platinum pin
d mercury pot
e moveable contact strip of metal bent at each end (e^1 and e^2) to engage in the key end notch(a^1) and the key frame notch (f^1). e^3 is a platinum contact strip. *g* is an insulator (ivory glass)
h spring strut
k mercury pot connected to the battery

Depending on the dimensions of the key and key frame slots, the moveable spring contact has a more limited movement than the rise and fall of the key. As the back of the key rises, the spring contact *b* is also elevated and the electrical circuit is closed. Once the clearance between e^1 and a^1 has been taken up, the moveable spring contact *e* is drawn up. Electrical continuity remains because b also continues to be drawn up. When the back of the key begins to fall, electrical contact is immediately broken. The moveable strip follows downwards once the clearance in the key notch is taken up. The moveable strip is then in the resting position ready for the next key movement. The dotted line in the Figure represents a thin layer of glass or ivorine to minimise friction. The purpose of the spring strut *h* is to hold the moveable contact strip in place wherever it is positioned.

FIG. 3.

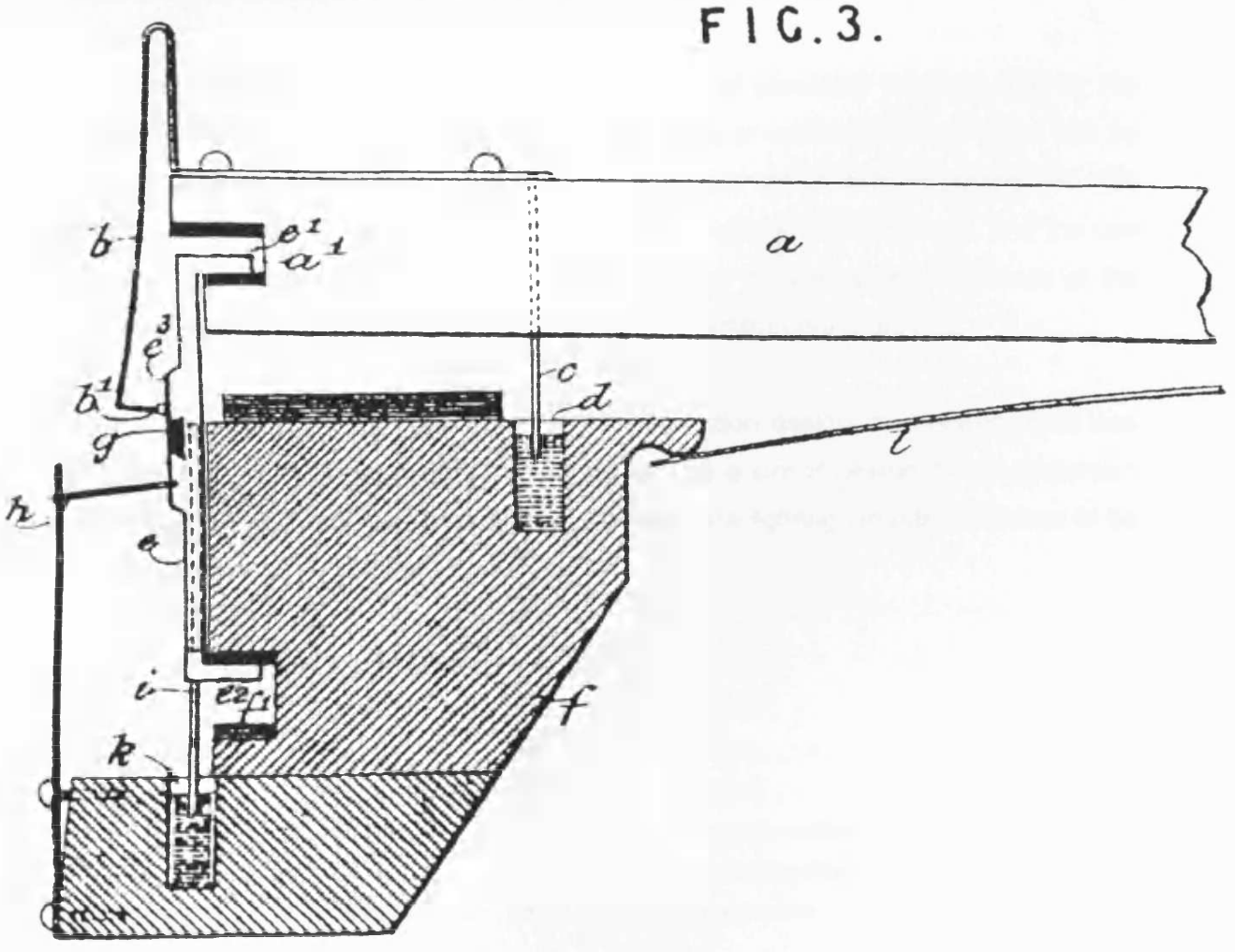

Figure 30 Vincent Willis's electrical contact system

Casson's patent

Thomas Casson (1842-1910), the organ-builder, writer of numerous letters to the musical journals of the late nineteenth century, author of pamphlets on organ design, and speaker at meetings, signified his profession as Bank Manager in the complete specification No.10638, deposited by his agent Abel & Imray on 25 April 1890 and following an earlier provisional specification dated 1 July 1889. The address given was Denbigh in the County of Denbigh. He entered the service of the North and South Wales bank in 1868 and was appointed manager of the Denbigh branch in 1875, retiring in1892. His life interest however was the organ, and he was to found what became known as the Positive Organ Company in 1887.[72]

In his specification, Casson describes a system of electrical contacts that by the movement of a stop-pulls or pushes, various stops or combinations of stops can be brought into operation by the depression of any one set of keys or pedals. He also describes how he can arrange for sub- and super-octave combinations, and the use of stops of through the extension principle, thereby enhancing the resources of the organ without materially increasing the size of the instrument or its cost.

There is nothing in the specification relating to action design, and nothing that was previously unknown or could not be developed as a circuit design by an electrician (as today for domestic house-wiring where there are lighting circuits that need to be activated from more than one switch point).

Altogether, Casson held five other patents:

Number	Date	Subject
4776	1882	couplers
11654	1884	couplers
8392	1889	pneumatic action
6496	1894	pneumatic action
16990	1903	melody action

72. Dixon, George, 'Thomas Casson: an Appreciation', *The Organ Quarterly* 3 (October 1948) http:www.ondamar.demon.co.uk/schemes/dixon/cass1.htm

Hope-Jones patent

Bryceson Brothers appear to have ceased its work on the innovation and construction of electric action organs from 1886 or thereabouts, so ongoing development from 1890 falls outside the scope of this thesis. Nevertheless, the work of Robert Hope-Jones, representing as it did a sea-change in technology and a discrete new phase that would resonate through the twentieth century with the operational advantages that were to accrue, is of such importance that I believe it necessary to devote at least an outline of his achievement in England.

Robert Hope-Jones (1859-1914) was the eldest of four boys born to a well-to-do family that owned the Hooton Grange estate near Birkenhead.[73] He was a sickly boy and educated at home by a private tutor until the age of 15, thereafter attending the Birkenhead school. In 1881, at the age of 17, he joined the Lairds shipbuilding yard where he learned the rudiments of electricity. After four or five years, he took a post in the newly formed Lancashire & Cheshire Telephone Company, being shortly thereafter promoted to the position of Chief Engineer. In 1889, his firm merged with several other companies to form the National Telephone Company, at which time he became Chief Electrician for the Liverpool district, but left after a few months to become a freelance electrical engineer. He was elected a Member of the Institution of Electrical Engineers in 1892.[74]

His parents had good singing voices and encouraged Robert to study music. By the age of nine, he was able to play occasionally the organ at the local church of St. Mary, Eastham. Later on, he was the first organist and choirmaster of St. Luke in the Lower Tranmere area of Birkenhead. In 1886, he became organist and choirmaster of St. John, Birkenhead. He immediately began to rebuild the 1845 Jackson organ on the west end gallery as a divided chancel instrument with the Liverpool organ-builder, Franklin Lloyd and volunteers from the congregation.

---

73. Fox, David H., *Robert Hope-Jones* (Richmond VA: The Organ Historical Society, 1992), pp. 2-10

74. The librarian, The Institution of Electrical Engineers, London, private communication.

Hope-Jones used this instrument to carry out experimental work that led to the development of an electro-pneumatic action, the subject of his first organ-related patent of 1890. This organ, with its moveable console, tilting tablets, three double touch claviers and numerous couplers and accessories, was finished in 1891.[75]

Hitherto, electricity had been introduced by organ-builders inexperienced in the use of a novel power supply and unwilling or unable to fulfil its potential capabilities. Now, for the first time, the design of an organ was developed by an electrical engineer intent upon deploying the technical possibilities of electrical circuits and switch-gear to provide organ console management never before obtained with the early electric action or tubular pneumatic systems. The Hope-Jones concept for the ultimate symphonic organ represented a new phase in organ design philosophy that set the operational (as distinct from the tonal) specification for large organs through the twentieth century. In the space of but a few years before he left England for the United States, Hope–Jones licensed his patented technology to nineteen British organ-builders, amongst whom were August Gern, Hele & Son, William Hill & Son, Eustace Ingram, Jardine & Co, Norman Brothers & Beard and W. G. Vowles.[76] 116 electric organs built by himself and his licensees represented a substantial *œuvre* for an organ-builder who was the subject of much rancour in the contemporary musical press. I calculate that over the three-year period 1891-1901, he was rewarded with a royalty fee income of £5,400 for 36 organs, say £108,000 in today's money. After allowing for promotional expenses, it does not seem to be an excessive income by modern expectations.

The 1890 patent covers several claims, of which the novel clavier key action is only one part. The main thrust relates to the coupling possibilities: manual to manual, sub-octave and super-octave options, unison clavier to quint, pedal to quint and so on. The specification also includes methodology for the control of swell-box shutters as part of the requirement for a fully portable console.

---

75. Editorial, *Musical Opinion* 162 (March 1891), p. 294

76. Hemsley, J. D. C., *The Role of Patents in the Development of the Victorian Organ*

The electric clavier action used tiny horseshoe electromagnets, the soft iron cores of which were only ⅛ in (3.3 mm) in diameter and ½ in (12.5 mm) between the poles--indeed, substantially smaller than the Schmoele & Mols units which were 12.5 mm (½ in) in diameter. Thus the era of miniaturisation had arrived to an extent that has not yet been surpassed. Hope-Jones eschewed the clumsy mercury pots, using instead rubbing contacts that were self-cleaning and kept free from oxidation, variously using a variety of base and precious metals.

His most outstanding claim to the College of Organists in 1891 was that a large four-clavier organ could operate for 'some six months on a little dry cell'.[77] Scientific analysis suggests otherwise.[78]

Hope-Jones left England in 1903, continuing his work in the United States with several short-lived assignments until he formed his own company in 1907. In 1910, his firm failed and he was hired by the Rudolph Wurlitzer Company, where he stayed until his early death in 1914. He is mostly remembered in the United States for his innovative ideas concerning the cinema organ.

Figures 31 and 32 are enhanced drawings taken from the 1890 patent. There are superficial likenesses with the Schmoele & Mols patent and also the Henry Willis patent of 1885, but the opportunity Hope-Jones created for the employment of tiny magnets, through equally tiny pneumatic disc valves having a movement span of only one hundredth of an inch (one hundredth of an inch) and a weight of one sixtieth of an ounce (0.5 g), was an order of magnitude ahead of the other patentees.

---

77. Hope-Jones, Robert, *Electrical Aid to the Organist,* Lectures 1890-1891 (5 May 1891), pp.1-12

78. Pykett, C. E., *Hope-Jones and the Dry Cell,* 2003, http://www.pykett.org.uk

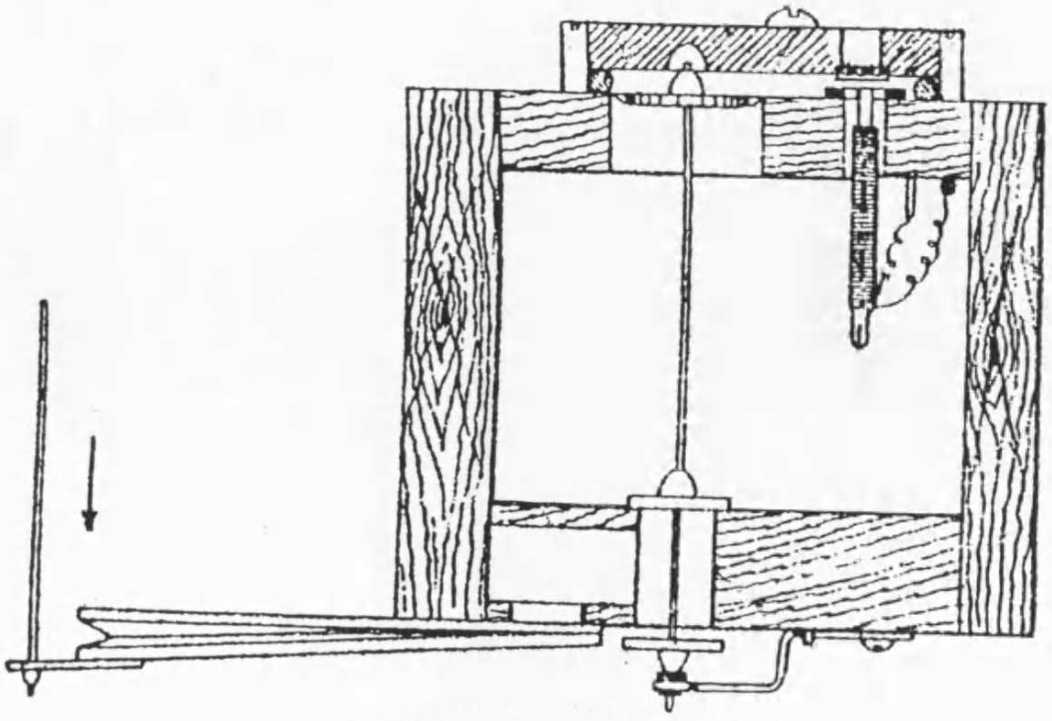

Figure 31 Hope-Jones electric clavier action
(Figure 37 of Patent No. 15461 AD 1890)

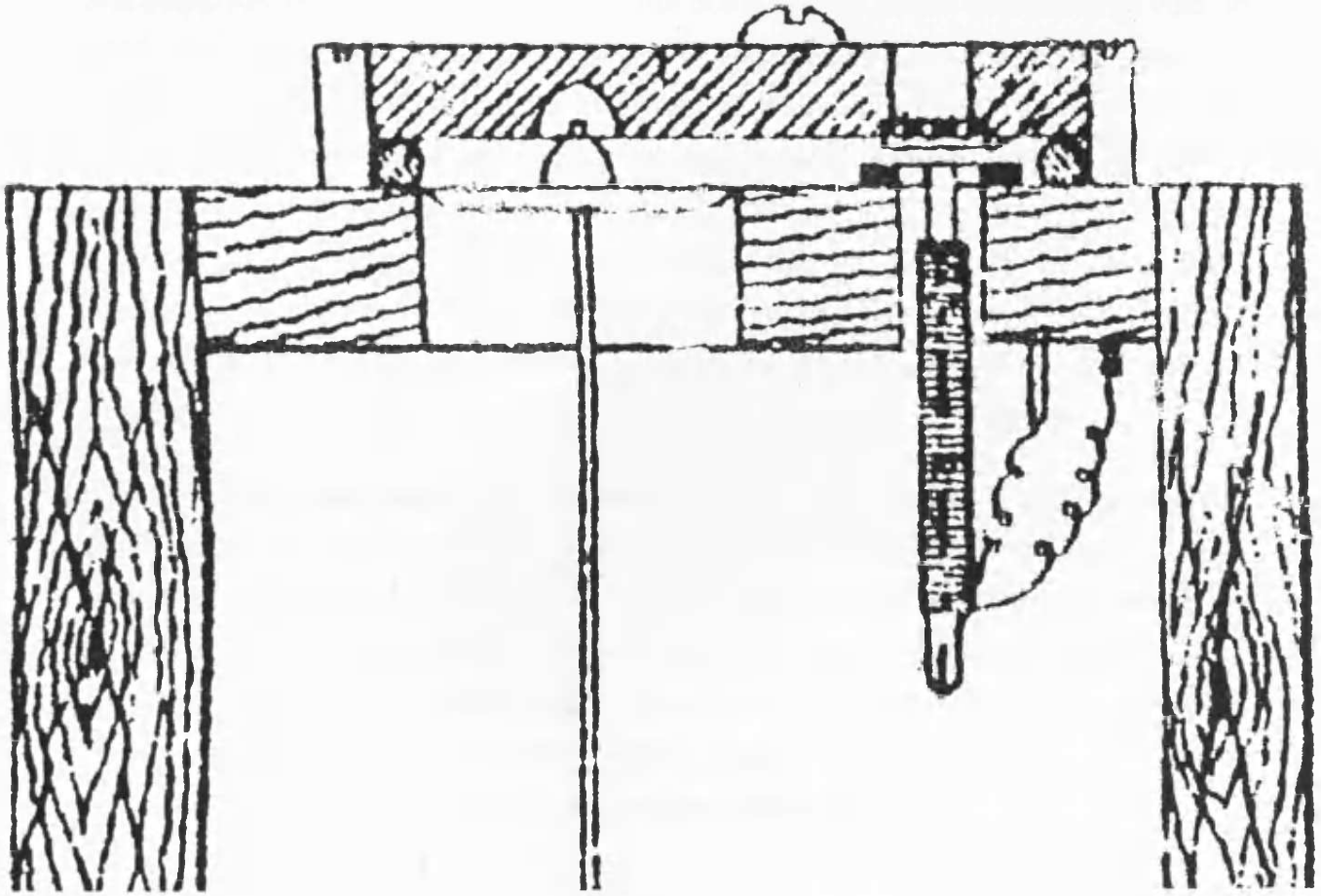

Figure 32 Hope-Jones electric clavier action – enlarged view
(Figure 37 of patent No. 15461 AD 1890)

3.3.2 French patents

The first important patent law[79] was introduced in 1791, shortly after the Revolution, when, influenced by the English Statute of Monopolies of 1624, monopoly rights for the *auteur* were granted for an optional period of 5, 10, or 15 years. Later on, an imperial decree of 1810 allowed foreign inventors to hold monopoly rights in France for inventions already patented by the inventor in his home country. The duration of these rights was, however, limited to the remainder of the term of the original patent. In the French system, there were patents of invention, of improvement, of importation (i.e. foreign patents), as well as patents of addition.

If, in the two years after the grant of a patent, the inventor had not put it into practice, and there was no acceptable reason for not doing so, the patent was declared void. In 1844, new legislation allowed French nationals to patent overseas, and foreigners were allowed to patent in France. Patents of importation were discontinued. The duration of a patent was still 5, 10, or 15 years. Most importantly, at least for today's research workers, the description was published in full, or as an abstract, only after payment of the renewal fee for the second year, on the basis that such early abandonment did not justify further official action. The French patent office *(Institut National de la Propriété Industrielle* – INPI) was only established in 1905, but the legislation of 1844 remained in force, substantially unchanged, until 1968.

Patent specifications between 1844 and 1863 were published in 79 volumes entitled *Description des machines et procédés pour lequels des brevets d'invention ont été pris sous le régime de la loi 5 juillet 1844.* All the specifications in this series are numbered in the order in which the fees were paid, from 1 to 27,046. Specifications accepted during 1861 to 1870 fell into *Séries* 2, are published in *Tomes* 80-116. Four volumes of indexes were published in 1856, 1866, 1870, and 1873. There are some 80 main classifications, followed by a classified list of patents and their duration,

---

79. The basis for this information on the historic French patent system was provided by Stephen Van Dulken, a senior executive of the Patents collection at the British Library, London. A US compiled index of nineteenth century French patents is available from the British Library Patents Collection Service Desk. Access to the *Tomes* containing the patent specifications from 1844 to 1873 is possible for BL accredited research workers.



date of application, name of the inventor, and volume number and page. Finally there is an alphabetical name index of inventors giving the place of residence, title of the invention and volume number and page.

A study of the indexes for 1852-1870 identified nine patent specifications relating to electric action for church organs and related instruments. These are:

Date	Number	Inventor	Address
2 February 1852	12988	Stein, Pierre	Rue cassette, 9, Paris
1 June 1860	45373	Huot, Charles	Rue St Sebastian, 4, Paris
17 July 1861	49656	Martin, Claude	Rive de Gier (Loire)
26 May 1862	*certificat d'addition*	Martin, claude	Rive de Gier (Loire)
24 October 1862 8 November 1862	56019 *Certificat d'addition*	Barcker, Charles Spackman Barker, Charles Spackman	Rue de Rennes, 21, Paris Rue de Rennes, 21, Paris
12 November 1862	56854	Pechard, Louis Charles Albert	Chez M. Lefevre, Arc de Triomphe, land-point de l'etoile, 10,Paris
12 December 1862	56594	Clair, Alexandre, et Ferat, Jules-Alexandre	Clair : Rue Durec, 5, Paris Ferat : Rue de l'Est, 33, Paris
13 April 1863 6 June 1864	58344 *Certificat d'addition*	Pechard, Louis-Charles-Albert Pechard, Louis Charles-Albert	Caen (Calvados) Rue de Bayeux, 48, Caen, (Calvados)
6 October 1868	82648 *Invention étrangère* after UK patent 6 April 1868, expiring 6 April 1882	Bryceson et Morten	represented by Henri Aguerra Rue Gaillon, Paris
2 April 1870	89443	Benay, Marie Alfred	represented by Charles Cherisson, Boulevard Beaumarchais, Paris

The dates are those at the time of filing, since the life of the patent (15 years for all the patents listed above) commenced from that time. The date of ratification by the Minister of State, or his delegate, was several days, weeks or even months later.

Of the nine patents, those of Huot and Martin are of little technical or practical interest, whilst that of Clair and Ferat provides no new material in spite of being

published more than 10 years later. Only those of Stein, Barker, and Pechard (spelt Peschard in all later publications and references), have historical importance for France, with those of Barker and of Pechard having particular relevance to the early commercial development of the electric organ. The Bryceson and Morten patent is, in essence, their UK patent of 1868, which stems from Barker's British Patent No. 232 of 1868, and, in turn, his earlier French patent No. 56019 of 1862. None the less, the Stein patent does warrant a thorough review since it describes innovative concepts for the use of electricity in the organ that were not to become a practical reality until the twentieth century.

There is a peculiar situation regarding the Pechard patents of 1862 and 1863 and the Barker patent of 1862: Pechard's patent of 1862 is not listed in the subject index for 1790-1876. The 1863 is however listed. The name indexes for 1862-65 do however list the 1862 patent and a *certificat d'addition* for the 1863 patent. We do not know why there was the omission of the 1862 patent from the subject index. We must further note that there is no reference to a 1862 patent in the *Tomes* for that year, whilst the entry for the later patent with its *certificat d'addition* merely states *'A. M. Pechard, pour l'application de l'éctricité à la manoeuvre des soupapes des orgues'*. There is no printing in full or in abstract of the formal patent description. We must therefore assume that the second year renewal fees for both patents were not paid.

The Barker patent of 1862 is also not listed in the subject index of 1790-1876. Again, the patent is referenced together with its addition in the 1862 name index. There is though no reference to a Barker patent in the three *Tomes* for 1862 or the *Tomes* for 1861, 1863 and 1864. The French Patent office - INPI - was able to supply copies of the handwritten texts for all three patents, but could not say whether the second year renewal fees had been paid. We may understand the reluctance of patentees not to pay renewal fees, but the gaps in the indexes and *Tomes* of two closely associated inventors does seem strange. More likely though, we may attribute the matter to clerical error on the part of the French administration.

Stein's patent

Jean-Joseph Stein[80] was a *facteur d'orgues* in Paris during the middle of the nineteenth century. His early years were spent in the development of small organs for churches where the price of a *grand orgue* was unaffordable. By 1847, he had built instruments with *anches libres*, known as the *orgue expressif* (the harmonium) from which his reputation stems. He also built a few pipe-organs, the most notable of which was a three clavier instrument of 31 stops for the Church of St-Julien de Brioude. There is no confirmation yet, but it is likely that Pierre Stein and one Émile Stein were sons in the business.

On 2 February 1852 at 3.55 pm, Pierre Stein, *facteur d'orgues* of Paris, presented himself to the *Secretariat general de la prefecture du department de la Seine* in Paris where he deposited his *Memoire descriptif* (in duplicate), and applied for a patent of 15 years, to commence on that day. The *brevet d'invention* was assigned the chronological number 12988. The recital on the opening page of the document was brief and to the point: the use of electromagnets to replace the mechanism of the pipe-organ, and organs in general. The purpose, description and claims of the invention that followed, occupied 12 large pages of closely written script, and four pages of drawings. The patent was ratified on behalf of the Minister of State for Home, Agriculture and Commercial Affairs on 8 April 1852.

In his opening statement, Stein remarked 'Until now, pipe-organ mechanisms, and particularly Grandes Orgues, left much to be desired regarding prompt action. Over the last several years, thanks to the good work of Cavaillé-Coll and Barker, the mechanism of these instruments has become so complicated that it is truly impossible for the mechanism to function for a long time without frequent maintenance'. Stein goes on to say that the cost of these mechanisms is considerable, and that his invention to replace mechanical action by an electromagnetic system offers important advantages.

---

80. Fleury, Le Comte Paul de, *Dictionnaire Biographique des Facteurs d'orgues* (Paris: Office Général de la Musique, 1918), p. 185

There follows a detailed description of the organ parts: the soundboard arrangement with the electromagnets for pulling down the pallets, the electrical contacts at the claviers, conducting wires and so forth. Not content with specifying this function for electricity, Stein describes its use for the drawing and retiring of the stops. The inventor completes the picture with further descriptions of the electrical operation of the shutters of the *orgue éxpressif*, and an electric motor for pumping the feeder bellows: surely a *tour de force* that surpasses technology offered by any other inventor in France, or for that matter, Europe, during the two decades under review. The quality of Stein's drawings demonstrates his more than adequate capability for draughting constructional detail, and nearly all the figures are to scale, so that we are able to assess the size of such components as pallets, electromagnets and the soundboard. Stein completes his *mémoire descriptif* with a statement of the principal advantages (claims) for his system:

1. The prompt action of the various movements
2. The facility to place the console wherever desired
3. The low cost of the system
4. An economy of space
5. An electric motor for providing wind
6. The ability to use any type of battery

Although the preamble to the patent specifically mentions the maintenance problems associated with the Barker lever, it is surprising therefore that Stein does not claim that these are overcome with his electric action. We must also note that there is no information provided on the electrical supply system; what were the preferred types of cell, what was their physical size, were cells connected in series, and how long were they expected to last with typical playing use? According to Hinton[81], Stein et fils exhibited an electric organ at the Paris exhibition of 1855. It seems that there

81. Hinton, *Story of the Electric Organ*, p. 23

were several defects, but chiefly there was an inadequate power supply to operate the larger pallet magnets. It also seems that the instrument did not receive an encouraging review. According to Pierre Jurine[82], the organ was later acquired by no less than Aristide Cavaillé-Coll.

All Stein's figures suggest that he used a single twin electrolyte cell for each of the several functions, having a configuration similar to that devised by Robert Bunsen. The Bunsen cell, a derivative of the earlier Grove cell of 1839, was invented in 1841, and by 1850, was well established as a powerful energy source. In the absence of ammeters and volt meters, operational data is sparse, but we believe that a single cell had an electromotive force of 1.9 V, and that a cell electrolyte capacity of 2-3 l (a large preserving jar) could yield a current of 10 A for lengthy periods. What is certain is that the dissolution of 1 g of the sacrificial zinc electrode produces 0.82 Ah (the Electrochemical Equivalent for zinc), so a current draw of say 10 A for 1 hour will deplete the zinc electrode by 12.2 g. A 1,000 g electrode with a typical loss of 500 g before the current falls off (due to the reduction in the electrode's surface area) will therefore supply 10 A for some 40 hours of playing time (say an average of five electromagnets drawing 2 A (say) each in circuit at any one time), or 13 weeks at 3 hours per week.

The disadvantage of the Bunsen cell was its use of fuming nitric acid: a health hazard which today would almost certainly be illegal for commercial operations.

Another dangerous disadvantage was the need to withdraw the electrodes whenever the cell was not in use. One wonders how many organists' ruined their frockcoats in attending to cell maintenance.

We do not know the extent to which Stein's patent was fully deployed at the 1855 *Exposition Universelle* in Paris, but we must assume that the clavier action was electrified, if not the stop action, *éxpressif* shutters, and feeder bellows motor,

---

82. Jurine, Pierre, *Joseph Merklin, Facteur d'orgues européan* (Paris: Aristide Cavaillé-Coll, 1991), p. 235

and that it must have worked, albeit with difficulties. We know that the power supply was suspect, but we must also consider whether the electromagnets had enough attractive force for day-to-day playing.

In the following table, I have scaled off the Stein drawings of the magnets to ascertain their diameters and lengths in an attempt to assess current consumption and attractive power.

Planche 1

Figure	Purpose	Description	Diameter	Length
1	pallet	single coil	60 mm	126 mm
2.	pallet	double coil	60 mm	88 mm
3.	pallet	double coil	60 mm	96 mm
Planche 2				
1.	pallet	solenoid plus a coil in series	65 mm	78 mm
2.	twin pallet	double coil	66 mm	99 mm
5.	slider	double coil	95 mm	140 mm
Planche 3				
1.	feeder bellows	four coils	45 mm	170 mm
2.	feeder bellows	four coils	135 mm	205 mm
7.	*expressif* motor	four coils activating a pneumatic motor	70 mm	95 mm

For my present purposes, an analysis of the single coil pallet magnet shewn in Figure 33 has been made. The simplicity of the magnet-pallet geometry would suggest that this mode of operation is likely to be that chosen by Stein for the 1855 *Exposition.* Briefly, the attractive power of an electromagnet increases with the current and the number of turns of the coil around the soft iron core. The voltage of the Bunsen cell is constant, so the coil current is a function of the wire diameter and its length of the coiled wire. Heavy wire will conduct more current, but will take up more space, so

a Pallet return spring
A Pallet pull-down with a cylindrical soft iron armature. The air gap is 6mm.
C Transverse board supporting the magnet
E Pallet
Y Soundboard

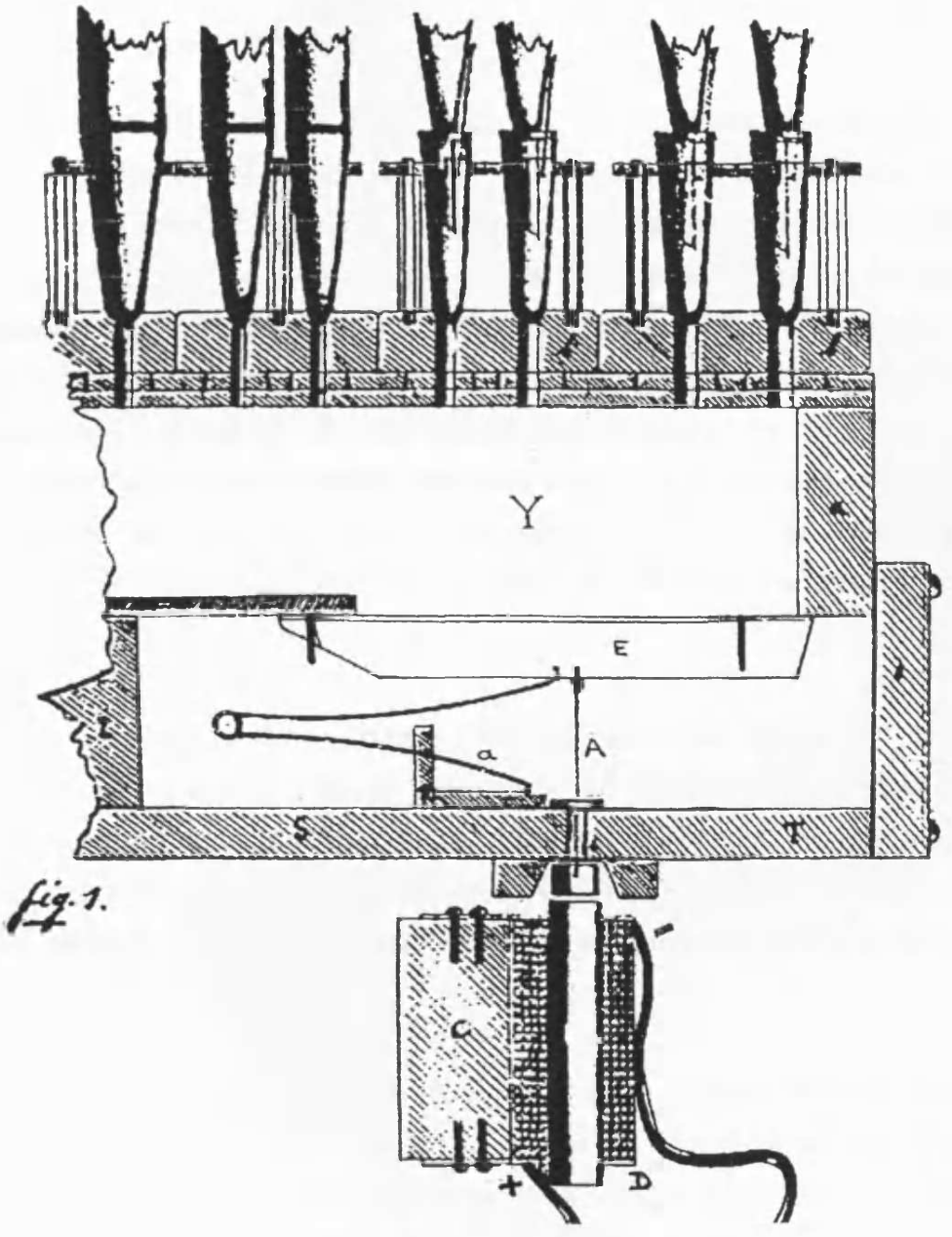

Figure 33 Stein's single coil electromagnet for pulling down a pallet in a conventional slider soundboard
(Figure 1 of *Planche 1* of French Patent No. 12988 AD 1852)

fewer turns are thus accommodated in a given bobbin volume. There is therefore, an optimum wire diameter that allows the maximum number of turns and current for the Stein single coil pallet magnet.

The author is indebted to T. G. Robson[83] for developing a computer model that predicts the maximum number of turns for any given wire diameter, the corresponding current, and the resulting magnetising force. A computer printout for the Stein magnet is shewn in Figure 34. It may be seen that at the peak A-turns in the graph (i.e. the maximum magnetic power), a coil of insulated copper wire of 1.6 mm in diameter will have 628 turns and pass a current of 1.36 A, giving an A-Turn value of 853. The results from a computer software programme developed by the Wolfson Centre for Magnetics Technology at Cardiff University was used to determine the attractive force on a pallet armature placed at varying distances from single coil magnet core is described in Appendix IV. We can now see that the single coil magnet would need to draw at least 6.5 A for it to be viable.

As early as 1824, William Sturgeon had demonstrated that a twin coil horseshoe assembly with a core or yolk, as in Figure 35, provided a much higher attractive force and this confirmed by the WCMT work described in Appendix IV. We now see that a current of only 0.5 A will have a pull on the pallet of 1.5 kg, i.e. three times higher than is theoretically necessary and well within the attractive power of the Stein horseshoe magnet.

The solenoid concept of Figure 36 provides an even more reliable basis for pallet operation, since the deleterious effect on flux density of an air gap in the external magnetic path between the cores is minimised. There is however a substantial mass in this system that would have slowed the response rate. Of the four pallet systems described by Stein, the single coil magnet in Figure 33 is by far the least efficient. We conclude that the horseshoe magnet configuration of Figure 35 was the system of choice for the 1855 *exposition*.

---

83. Private communication from T. G. Robson, a control engineer with substantial experience in the development of computer software.

ELECTROMAGNET WITH DEFINED DIMENSIONS AND OPERATING CONDITIONS:
Effect of selection of wire thickness (gauge) on no. of turns that can be wound, the corresponding resistance, and the current and magnetomotive force produced by the coil

Key Constants:

Wire		
Insulation thickness	0.15	mm
Resistivity	1.75E-02	ohm.mm2/m
Coil		
Winding outside diam.	60	mm
Winding inside diam.	23	mm
Winding length	126	mm
Cell		
emf	1.9	V
Internal resistance	0.5	ohm
Circuit		
Cabling resistance	0.2	ohm
Key contact resistance	0.01	ohm

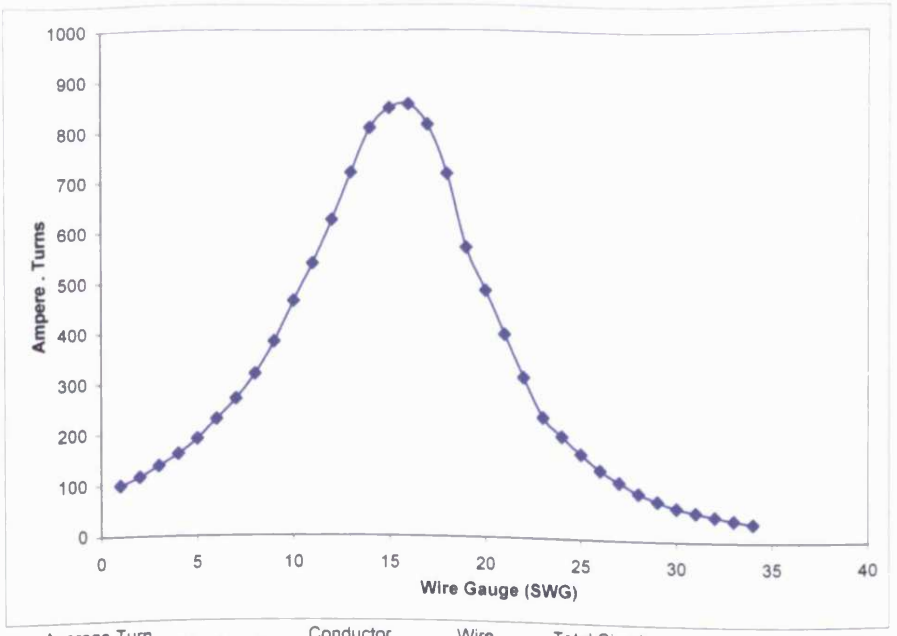

Wire Gauge	Wire Diam	Wire Total Section	Half Winding Section	No . of Turns	Average Turn Diameter	Wire Length	Conductor Section	Wire Resistance	Total Circuit Resistance	Coil Current	Ampere . Turns	Power
mm	mm	mm2	mm2		mm	m	mm2	ohm	ohm	A	AT	W
1	7.62	62.7264	2,331	37	41.5	5	45.604	0.002	0.71	2.6691	99.19	0.01
2	7.01	53.4361	2,331	44	41.5	6	38.595	0.003	0.71	2.6664	116.31	0.02
3	6.401	44.903401	2,331	52	41.5	7	32.180	0.004	0.71	2.6623	138.20	0.03
4	5.893	38.353249	2,331	61	41.5	8	27.275	0.005	0.72	2.6570	161.49	0.04
5	5.385	32.319225	2,331	72	41.5	9	22.775	0.007	0.72	2.6491	191.06	0.05
6	4.877	26.801329	2,331	87	41.5	11	18.681	0.011	0.72	2.6366	229.31	0.07
7	4.47	22.7529	2,331	102	41.5	13	15.693	0.015	0.72	2.6211	268.52	0.10
8	4.064	19.044496	2,331	122	41.5	16	12.972	0.022	0.73	2.5973	317.90	0.15
9	3.658	15.665764	2,331	149	41.5	19	10.509	0.032	0.74	2.5596	380.86	0.21
10	3.251	12.609601	2,331	185	41.5	24	8.301	0.051	0.76	2.4973	461.66	0.32
11	2.946	10.536516	2,331	221	41.5	29	6.816	0.074	0.78	2.4233	536.11	0.43
12	2.642	8.655364	2,331	269	41.5	35	5.482	0.112	0.82	2.3112	622.44	0.60
13	2.337	6.953769	2,331	335	41.5	44	4.290	0.178	0.89	2.1389	716.99	0.82
14	2.032	5.438224	2,331	429	41.5	56	3.243	0.302	1.01	1.8783	805.09	1.06
15	1.829	4.532641	2,331	514	41.5	67	2.627	0.447	1.16	1.6428	844.82	1.21
16	1.626	3.709476	2,331	628	41.5	82	2.076	0.690	1.40	1.3567	852.54	1.27
17	1.422	2.965284	2,331	786	41.5	102	1.588	1.129	1.84	1.0330	812.02	1.21

Figure 34 Computer modelling tool for electromagnet coils
(after T. G. Robson)

17	1.422	2.965284	2,331	786	41.5	102	1.588	1.129	1.84	1.0330	812.02	1.21
18	1.219	2.307361	2,331	1,010	41.5	132	1.167	1.975	2.68	0.7076	714.89	0.99
19	1.016	1.731856	2,331	1,346	41.5	175	0.811	3.788	4.50	0.4224	568.57	0.68
20	0.914	1.473796	2,331	1,582	41.5	206	0.656	5.500	6.21	0.3060	483.92	0.51
21	0.813	1.238769	2,331	1,882	41.5	245	0.519	8.270	8.98	0.2116	398.12	0.37
22	0.711	1.022121	2,331	2,281	41.5	297	0.397	13.105	13.82	0.1375	313.64	0.25
23	0.61	0.8281	2,331	2,815	41.5	367	0.292	21.976	22.69	0.0838	235.75	0.15
24	0.559	0.737881	2,331	3,159	41.5	412	0.245	29.368	30.08	0.0632	199.55	0.12
25	0.508	0.652864	2,331	3,570	41.5	465	0.203	40.192	40.90	0.0465	165.86	0.09
26	0.457	0.573049	2,331	4,068	41.5	530	0.164	56.580	57.29	0.0332	134.90	0.06
27	0.417	0.514089	2,331	4,534	41.5	591	0.137	75.749	76.46	0.0248	112.68	0.05
28	0.376	0.456976	2,331	5,101	41.5	665	0.111	104.814	105.52	0.0180	91.84	0.03
29	0.345	0.416025	2,331	5,603	41.5	731	0.093	136.751	137.46	0.0138	77.45	0.03
30	0.315	0.378225	2,331	6,163	41.5	804	0.078	180.433	181.14	0.0105	64.64	0.02
31	0.295	0.354025	2,331	6,584	41.5	858	0.068	219.791	220.50	0.0086	56.73	0.02
32	0.274	0.329476	2,331	7,075	41.5	922	0.059	273.756	274.47	0.0069	48.98	0.01
33	0.254	0.306916	2,331	7,595	41.5	990	0.051	341.981	342.69	0.0055	42.11	0.01
34	0.234	0.285156	2,331	8,174	41.5	1,066	0.043	433.685	434.39	0.0044	35.75	0.01

B lever armature
G Armature lever hinge

Note: the magnetic force of such a configuration is several times higher than for a single coil magnet for the same current and number of turns.

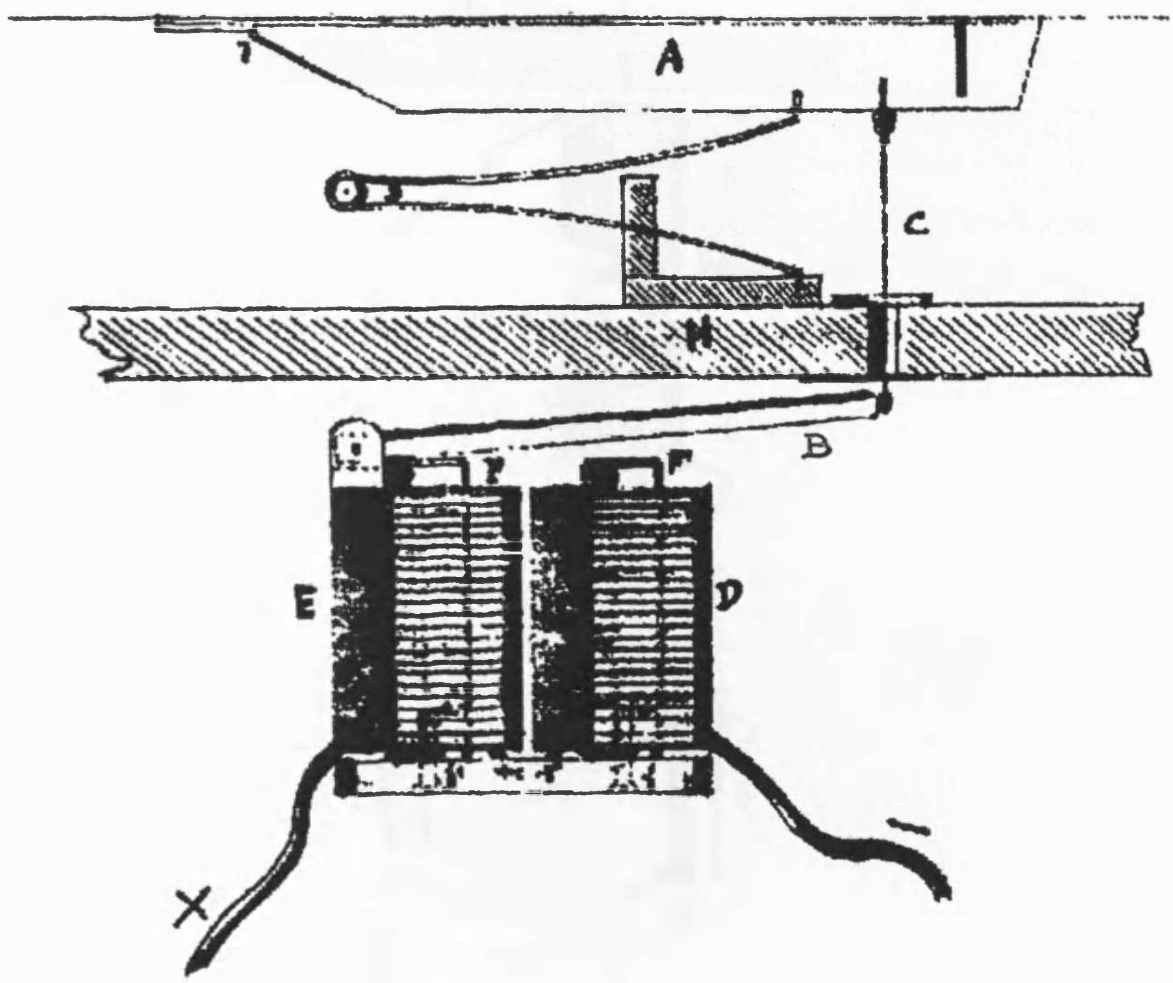

Figure 35 Stein's horseshoe pallet electromagnet
(Figure 2 of *Planche 1* of French Patent No. 12988 AD 1852)

1 Soft iron core having a sliding fit into the top electromagnet A
2 Bobbin of electromagnet A
3 Bobbin of electromagnet D with its fixed core

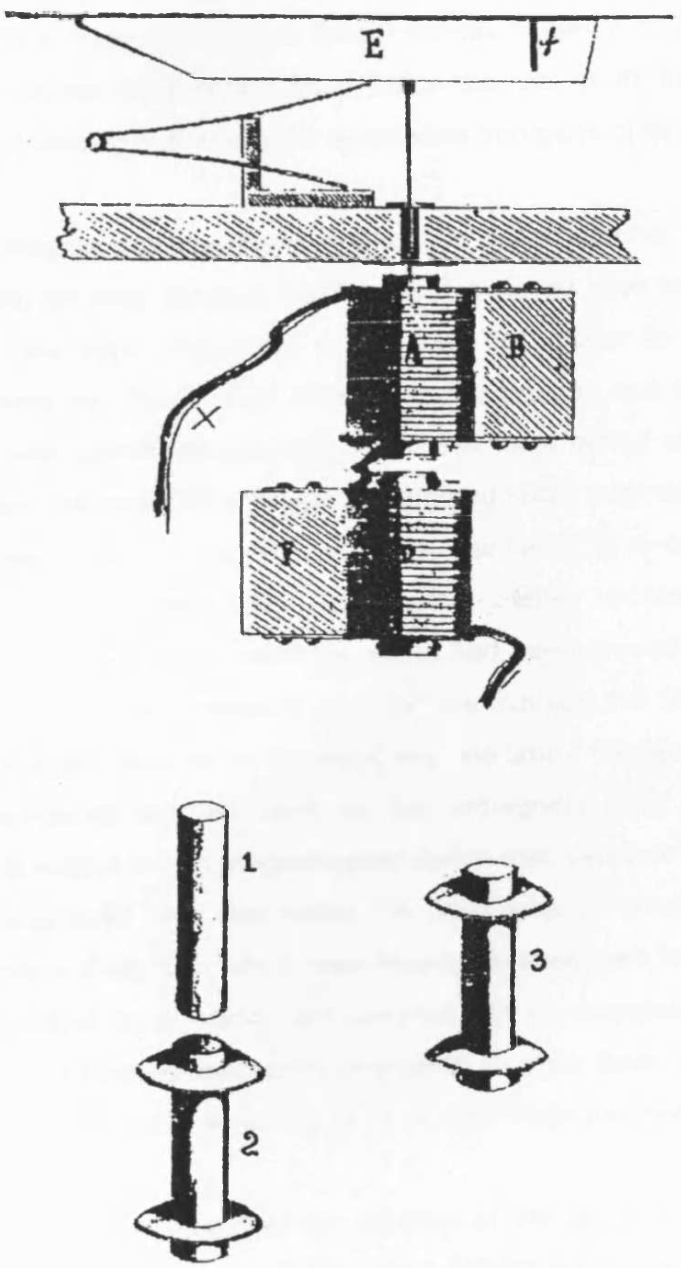

Figure 36 Steins's solenoid pallet electromagnet
(Figures 1, 3 and 4 of *Planche 2* of French Patent No. 12988 AD 1852)

A crucial factor in the effective operation of a pallet magnet supplied by a single cell battery is the need for a low electrical resistance at the clavier contacts and throughout the circuit, plus the internal resistance of the cell itself, but even more importantly, a low resistance of the wiring loom connecting the claviers to the pallet magnets. The Stein *Exposition* organ would almost certainly have had a compact disposition with short electrical connections, but in the real world, the potential driving force for the use of electric action was its application in organs of larger buildings.

All Stein's pallet magnet configurations would have drawn around 1.4 A. In a typical organ composition, we may assume that four or five clavier keys would be depressed at any one time (the Stein *exposition* organ does not appear to have had a pedal division). That being so, the current draw from the Bunsen cell for pallet operation would be 6-8 A, well within the capacity of the cell for a period of several weeks of typical church use. The somewhat larger soundboard slider magnets (*vide* Figure 37), would have drawn 2.5-3 A, again within a Bunsen cell's capacity, assuming intermittent operation. It does seem, though, that Stein's simple switching did not automatically cut off the current once the slides had been moved in either direction. This would result in an unsustainable drain on the Bunsen cell for more than a few minutes if several stops were to be drawn at any one time. Strangely, a device based on what is, to all intents and purposes, an electromagnetic relay is described in the patent. Figure 38 shows a twin magnet pallet device that switches off one coil when a second coil is energised and vice versa. A short leap of imagination could have devised the modern system in which one magnet is energised to pull out the slider when the stop knob is drawn, and then automatically de-energised when its work is done. Conversely, a second magnet is energised to push back the slider when the stop knob is retired and again de-energised when the slider has been fully returned.

Stein's design for the movement of the shutters of the *boîte éxpressive* is the first known example of an electro-pneumatic action. Whilst it did not provide an infinitely proportional control of the shutter opening and closing, the control pedal had four step switches connected to corresponding electromagnets which operate a wedge- shaped power bellows attached by a cord at its lifting to vertical shutters. We have to ask the question: why Stein did not use the idea for the soundboard pallets?

B Lever pivot
D-E Right angle lever, the top of which is attached to the stop slider, and the horizontal arm of which has an armature *A*.
F Slider return spring

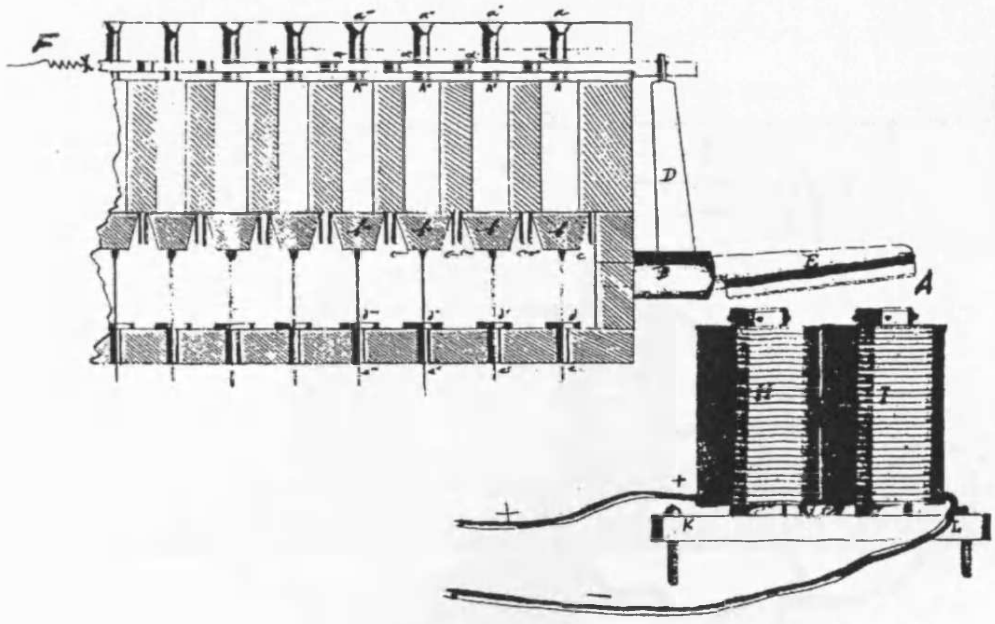

Figure 37 Stein's slider magnet system
(Figure 5 of *Planche 2* of French Patent 12988 AD 1852)

A	Armatures attached to the lever G
E	Pallet
C, D	Adjustment pad and screw
F	Link between the pallet and the lever G
V	Counterweight
L, M	Magnet coils
a	Armature
c	Switching lever
y	Return spring

Note: When the magnet M is energized, it attracts the lever G. Simultaneously, the extended core at the further end of the magnet attracts the armature of the lever c, thus breaking the electrical circuit to the magnet L, and allowing the lever G to move and pull down the pallet. The purpose of this type of pallet operation is not clear to me, as one or other of the magnets appears to be energized all the time, with a continual drain on the power supply.

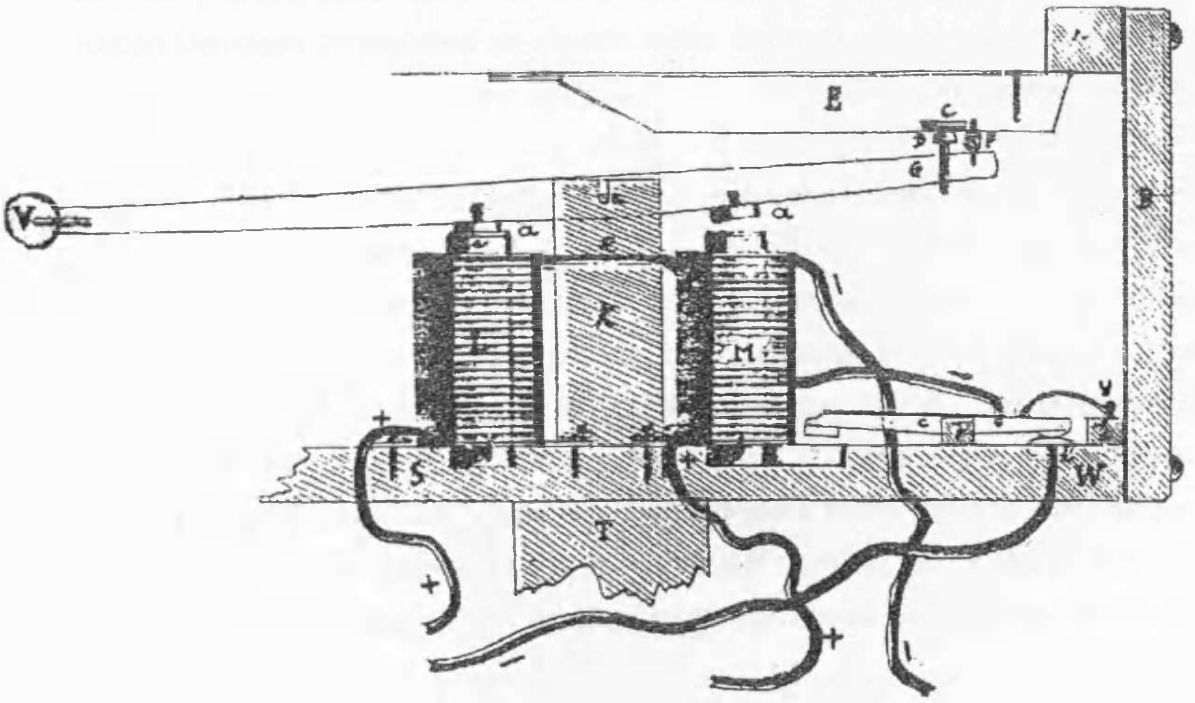

Figure 38 Stein's horseshoe pallet magnet and auto-magnet switching
(Figure 3 of *Planche 1* of French Patent No. 12988 AD 1852)

Finally, Stein's scheme for the electric operation of the feeder bellows must again be the first application of electricity to the generation of wind. He conceived a power drive based on two electromagnets attached symmetrically to a rotating shaft, the cores of which moved across the cores of two symmetrically fixed stationary electromagnets. The shaft was fitted with a commutator that reversed the current direction every half turn, and its motion was transmitted to the feeder bellows by a simple crank. Although Stein made it an important claim for his patent, simple electric motors had been built for several years prior to 1852. Thomas Davenport, a blacksmith of Vermont in the United States, had designed a motor with a 7 inch flywheel that rotated at 30 rpm.[84] By 1837, he had developed a machine that rotated at 1000 rpm, and could raise a 200 lb weight at a speed of 1 foot per minute. In 1839, Robert Davidson constructed an electric motor that was able to do such work as turn articles on a lathe or drive a small carriage. The limiting factor in commercialisation of electric motors was how to obtain a cheap and reliable power source: a situation that remained until the advent of cheap steam engine-dynamo sets, and ultimately, that of mains electricity. What Stein did not tell us, or perhaps did not know, was that the power to drive even a small organ feeder bellows with his electric motor would require much larger magnets and several Bunsen cells connected in series. Even the smallest house-organ today is driven by a 0.125 HP motor, say 100 W. This is equivalent to five Bunsen cells in series delivering 10-11 A at 9.5 V. At this output, the battery would have a useable life of 3-4 hours. We may therefore safely assume that the electric blowing was not part of Stein's *exposition* model. Indeed, we must await the 1890s before electric blowing by either electro-mechanical cranks or centrifugal fans became a reality.

There was also the problem of sparking, or even arcing, at clavier contacts and draw-stop switchgear whenever the circuit was broken. Sparking damaged the contact surfaces and was a potential source of fire. It must have been a real problem for Stein and other builders who contemplated direct action systems. Sparking results from the energy stored in the electromagnet coil being dissipated across the contact gap as it is opened. In effect, the coil acts as a generator, producing an emf for a short time of perhaps several hundred volts.

---

84. King, W. James, 'The development of Electrical Technology in the 19th Century' *Smithsonian Institute, National Museum Bulletin* 228 (1962), p. 263

This is also the reason why large magnets have a noticeable release time. The larger the magnet, the larger the back emf, and the longer the release time. Sparking is minimised in modern magnet systems by the use of a clamping diode, wired in parallel with the coil, which allows the back current to collapse in a controlled manner and thereby reduces the propensity for destructive sparking.

Summary

At a time when electricity was very much in its infancy, the concepts described in Pierre Stein's patent are remarkable, not only for their ingenuity, but more importantly for their creativeness and foresight. That the *Exposition* demonstration model was a prototype, with all the deficiencies that are inevitable when working on the frontiers of technology, does not, in any way, detract from the supreme value of this milestone in pipe-organ technology. Whilst the model must have demonstrated the principle of direct electric action for the clavier pallets and the soundboard sliders, at least in broad terms, the electromagnetic drive for the feeder bellows does remain suspect: the power requirement is far too much for the economy of nineteenth-century batteries. The outstanding feature of the patent is, without any doubt, a workable electro-pneumatic system for the control of the swell shutters. This is a prime example of an electromagnetic relay controlling a power bellows to provide the mechanical work, one that preceded the electro-pneumatic action patents of Barker, Peschard and Bryceson by more than a decade.

The use of the centrifugal fan (the term 'blower', although commonly used, is not the correct technical term) with its electric motor drive did not take place until the 1890s, and the full deployment of the Stein concepts had to await the 1920s, when inexpensive low voltage direct current electricity became available from the mains supply. Even then, the pioneering work of the Wicks Organ Company in the United States, with its direct action pallet operation was applied only to unit (i.e. individual) pipes. More recently, direct action for pallets acting on wind channels has been installed by several builders. Perhaps Pierre Stein's recognition now lies with the direct electric action console of such instruments as the Klais organ in the Birmingham Symphony Hall.

It is perhaps unrecognised that French electrical science and engineering in the early to mid-nineteenth century demonstrated a creative mode of the first order. Ampère, The Breguet family, Gustave Froment, le Comte Theodore du Moncel, Georges Leclanché and Gaston Planté were all active in this field. Indeed, the French could lay claim to have invented the telephone 20 years before Alexander Graham Bell, and by the 1880s du Moncel was even writing about the transmission of images by electricity.

Huot's Patent

Apart from his postal address in Paris at the time his *Mémoire Descriptif* was deposited by his agent Mathieu, nothing is known about Charles Huot. He is not recognised in de Fleury's *Dictionnaire biographique des facteurs d'orgues* of 1918,[85] Roland Gaultier's book of 1997[86] or Dieterlen's *L'Harmonium* of 1996.[87] The patent document merely states that he is a *manufacturier* domiciled at 4 Rue St-Sebastian, Paris.

The original document has not kept well, so the INPI (French patent office) print quality is poor and it is extremely difficult to read the handwritten text. Nevertheless the single drawing provides enough information for a meaningful analysis. The *exposé* and *resumé* are each one and a half pages in length. The text suggests that the electricity is used for the operation of reed-organ and pipe organ pallets, (*soupape de l'anche ou du soupape d'orgue*).

Huot considers only direct electric action, using a single coil electromagnet, *vide* Figure 39. No scale is given, so it is not possible to be sure about the magnet size, but if we assume a pallet length of 200 mm and a pallet drop of 6 mm we can estimate the magnet bobbin size at 35 mm in diameter and 40 mm in length. These dimensions are considerably smaller than those of the Stein single coil magnet, suggesting that Huot had in mind the reed organ.

The Huot concept is very similar to that put forward in Gauntlett's patent nearly nine years before. Huot though proposes twin plate key contacts rather than the pin and plate system of Gauntlett. Here we must note an error in the wiring; Huot wires the electromagnet directly to the power supply so that the magnet is always energised whether the clavier keys are depressed or not. Even worse, a depression of any key

---

85. Fleury, Le Comte Paul de, *dictionnaire biographique des facteurs d'orgues* (Paris: Office Général de la Musique, 1918)
86. Gaultier, Roland, *La facteur d'orgues en France de 1800 à 1870* (Villeneuve d'Ascq: Presses Universitaires du Septentrion, 1997)
87. Dieterlen, Michel, *L'Harmonium* (Villeneuve d'Ascq: Presses Universitaires du Septentrion, 1996)

A clavier key
a Key pivot
B Electromagnet
c Key contacts
D Pallet box
d Pallet spring
E pallet spring

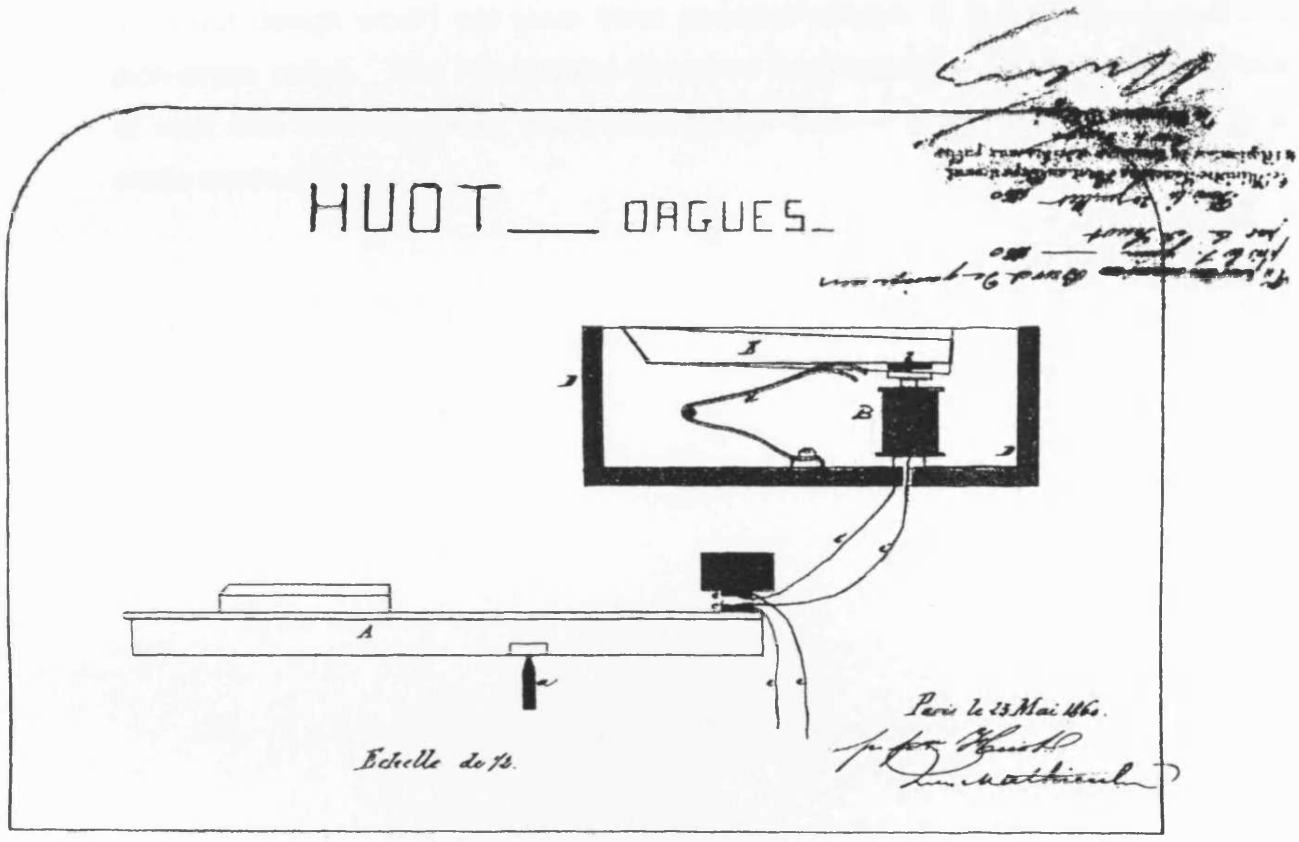

Figure 39 Huot's clavier key action
(French Patent No. 45373 AD 1860)

will short-circuit the power supply and almost certainly cause overheating of the contacts and wiring, with the inevitability of fire. We must assume an oversight in the draughting. Perhaps we are fortunate in not being told of the nature or number of the batteries.

Intrapolation of the computer studies carried out by the Wolfson Centre for Magnetics Technology at Cardiff University on the Stein single coil electromagnet indicates that the Huot design would not have been powerful enough to pull down conventional pipe-organ pallets. The Huot patent document is altogether an inconsequential piece of work that has no novelty and would appear to have been taken out solely as a crude marketing ploy.

Martin's patent

This is another patent that has only a limited interest for the organ-builder. Again, Claude Martin is not listed in the *dictionnaires biographique.* The patent recital states that he is a *mécanician, and* his address is given as Rive de Gier in the Upper Loire (497 km south of Paris and 39 km from Lyon).

His invention is given a proprietary name: *Electro-musical Martin* and the recital description reads: *Electro-musical Martin, consistant dans l'application de l'électricité à divers instruments de musique tels que orgues d'eglise, harmoniums, orgues de barbarie, serinettes, pianos et tout autres instruments susceptibles de recevoir cettes applications, etc.* Martin describes a device for the playing of the claviers of an instrument to enable it to play paper rolls with holes placed according to the notes to be played. During playing, the paper is wound by hand from one drum whilst a series of fine wire brushes make electrical contact through the holes, thus activating the electromagnets that operate hammers positioned above the clavier notes. The invention does not require any change or adaptation to the instrument, it is simply placed adjacent to the clavier. It does not appear to have relevance to the electrification of pipe-organ soundboard pallets and yet it was notable enough for Barker to cite it in his patent of 1862.

Barker's electric action patent

This patent is the third patent taken out by Barker (*vide* Appendix I for a biographical note) whilst he resided in France. His first patent of 1839 was the seminal invention of the Barker pneumatic lever used for the first time by Cavaillé-Coll in the resolution of the heavy action difficulties with the new organ being built for St-Denis, Paris, whilst his second patent of 1855 related to improvements that stemmed from operational experience with the St-Denis and other large organs that followed.

His patent of 1862 is the first in the world to describe the technology for the electro-pneumatic operation of soundboard pallets. Whilst Gauntlett and Stein had hinted at the concept for the movement of the swell box shutters and Goundry similarly for the clavier action, Barker was now for the first time describing the use of an electro-pneumatic system for the pulling-down of soundboard pallets based on practical experimentation and which saw its fulfillment in the Barker organ for the Collegiate Church of St-Laurent, in Salon. Barker called it his *appareil pneumato-électrique,* but as we sall see later, it is derived from experiments that Peschard commenced in 1860.

The *memoire descriptif* is lengthy at ten pages, but supported by only one page of figures. Barker, as befitted a Chevalier de la Légion d'Honneur, felt it incumbent upon himself to spend the first three pages authoring the history of the organ since the twelfth century, the complexity of the mechanical action of the organ (with its thousands of parts in wood and metal that connected the claviers up to *500 dècimetres* from the soundboards) and his invention of the pneumatic lever in 1839.

It is only after this preamble that Barker starts to describe his invention in a long and somewhat tedious manner. Today, an inventor would regard brevity as important in protecting the minutiae of the technology from his competitors. Here we have the impression that Barker wants to demonstrate his leadership expertise without due regard for the security of his invention. But do we do him an injustice? Perhaps the ability of professional people in the nineteenth century to understand the concepts of mechanical motion and simple electrical circuits was not as easy as we find them today. For us, though, the figures tell all.

As we would expect, the document shows nothing of the sophistication of Barker's British patent of 1868, taken out for the exploitation of that market at Henry Bryceson's urging. For example, the clever idea of placing the batteries on the top of the wind reservoirs so that the electrodes are automatically withdrawn when the blowing is stopped is not mentioned. The several figures in the accompanying drawing have not stood the test of time in the French Patent Office, so the two most important: those showing the electromagnet with its disc valves and the section through the soundboard, have been enhanced so that their mode of operation is now clear, *vide* Figures 40 and 41.

Barker uses a horseshoe magnet with its soft iron armature operating a vertical rod to which is attached two disc valves controlling the pressurisation and exhaustion of the externally placed pneumatic motor that provides the power to pull down the pallet. The valve assembly is reminiscent of the slide valve of a steam engine or early hydraulic power cylinder. It is made of brass for accurate and stable dimensioning and is mounted externally on the bottom board of the soundboard for easy access and maintenance. The drawing is scaled so we may note the following dimensions:

Diameter of the iron cores	: 12 mm (1/2 in)
External diameter of the coils	: 32 mm (1 1/4 in)
Length of the coils	: 51 mm (2 in)
Air gap between the core and armature	: 2 mm (1/12 in)
Diameter of the disc valves	: 19 mm (3/4 in)

Application of the Robson software tool (*vide* page 104 and Figure 34) indicates a maximum magnetising force at an A – turn value of 630 (467 turns with 1.41 A) . The Wolfson Centre for Magnetics Technology software estimates the attractive force on an armature-core air-gap of 2 mm as 400 g (manual calculations carried out by Robson give an attractive force of 450 g). My calculation of the attractive force required to operate a 19 mm disc valve having an open airflow area of 0.7cm ^{2} (25% of the disc valve area) and a mass of 40-45 g including the push rod and armature, against a wind pressure of 70 mm water gauge, is 60-65 g, so the A-turn value actually required may be reduced to around 100, equivalent to a current flow of only 0.2 A.

Note: this drawing is full scale.
The original document is
in a poor state, so the
drawing has been enhanced.

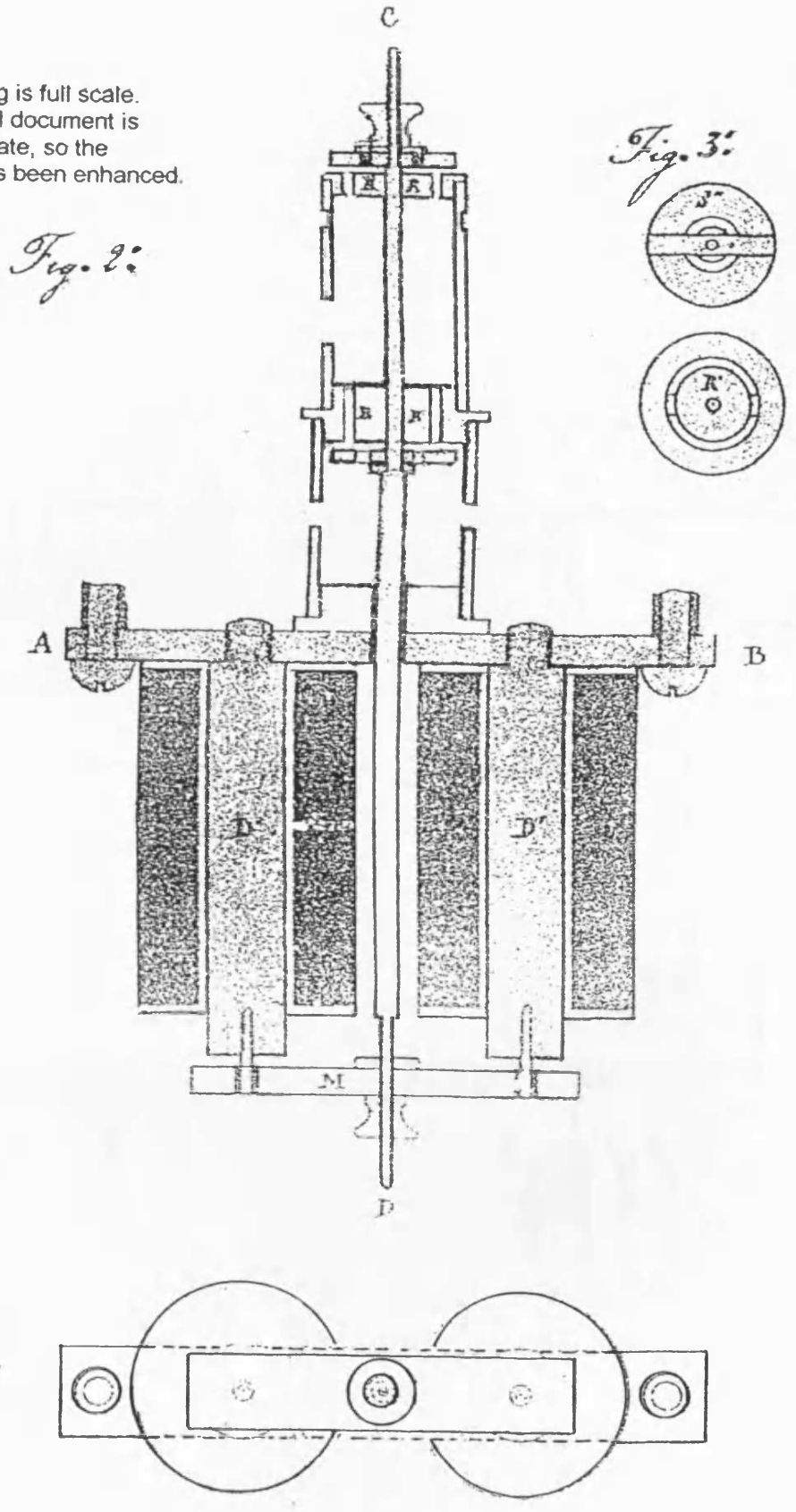

Figure 40 Barker's electromagnet and double disc valve
(source: French Patent No. 56019 AD 1862)

Note: this drawing is 1 /3 scale.
The original document is
in a poor state, so the
drawing has been enhanced.

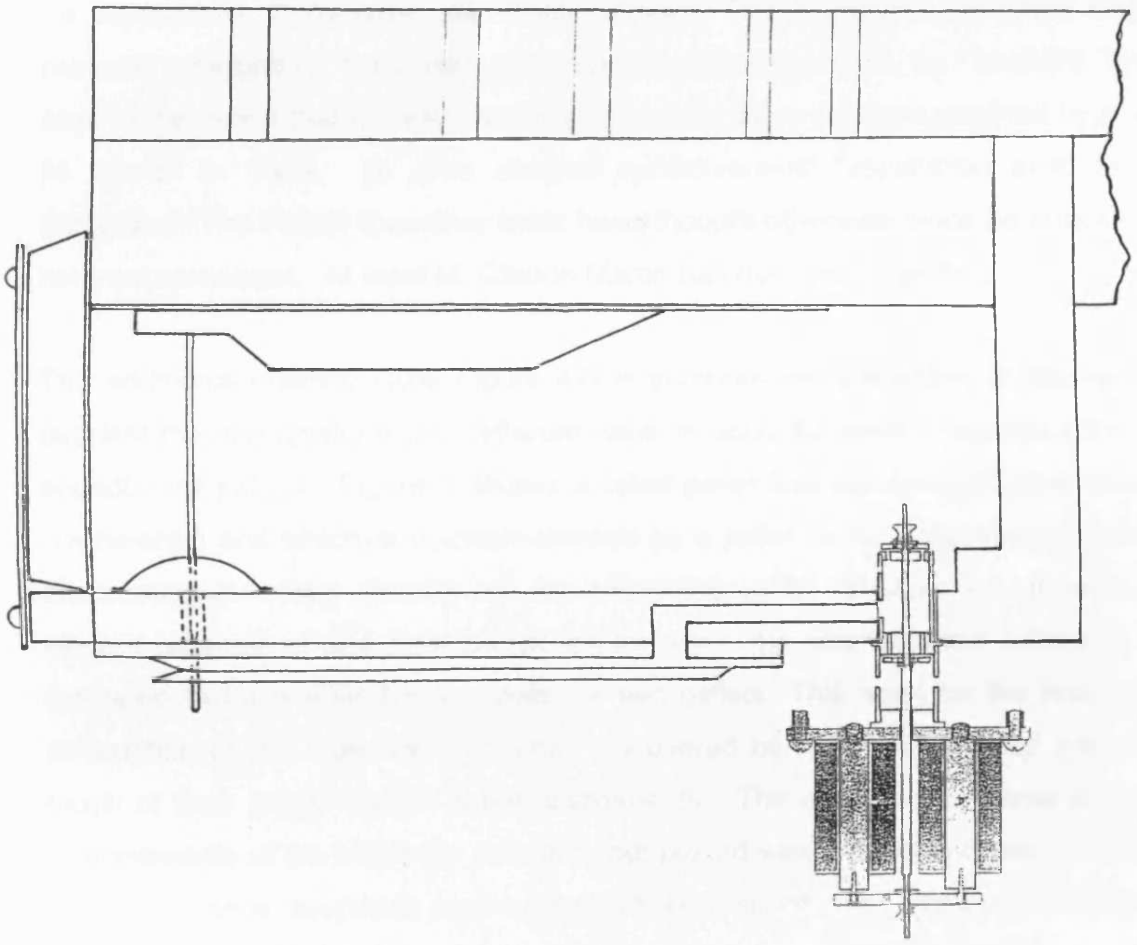

Figure 41 Barker's electro-pneumatic system
(source: French Patent No. 56019 AD 1862)

I deduce that the electromagnet is oversized by several times, even after allowing for a frictional and inertial factor of 1.5. Now we may understand the high [average] current of 0.5 –0.6 A taken by the Barker magnets at Salon de Provence.[88]

Perhaps Barker became aware of what Peschard was to patent on 12 November 1862 for he deposited a *mémoire descriptif* for a *certificat d'addition* on 8 November, only two weeks after having placed the patent specification with the Secretary of State for Agriculture, Commerce and Public Works. This certificate contained important material anticipating the *contra pression* principle enunciated by Peschard. We also read in the recital that not withstanding some prior art in a patent obtained by a certain M. Martin in 1860, *'je m'en réservé exclusivement l'application avec l'appareil électrique'*. The Patent Examiner must have thought otherwise since he struck out the relevant sentences. At least M. Claude Martin has not been forgotten.

The additional material (*vide* Figure 42) is summarised in a sheet of figures shown overleaf that demonstrate four different ways of applying electromagnetic force to the soundboard pallets. Figure 1 shows a relief pallet that opens upwards (rather than downwards) and which is counterbalanced by a pallet in the conventional mode, the electromagnet acting directly on the balancing pallet. This is an interesting and elegant example of direct electric action for which the only technical difficulty I see is the need to have effective air seals for two pallets. This must be the first patented description of the 'balancier', recently discovered by organ-builders for relieving the touch of their larger tracker action instruments. The other three figures show other arrangements of the balancier principle, but placed within the soundboard. It does not seem that these '*soupapes contre pression*' were successful. We have already noted that his British patent, four years later, and surely based on his experience with the Salon and St-Augustin organs, employs pneumatic levers placed outside the soundboard. Perhaps the difficulties in balancing the forces without a simple external means of adjustment were too powerful and the time for experimentation too short.

Since the drawings are to scale, the dimensions of the coils of the horseshoe magnet are 80 mm long with a diameter of 27 mm.

88. Miller, George Laing, transl. Gabrièl Bédart *Revolution récente dans la facture d'orgue* (Paris:1915), p. 31

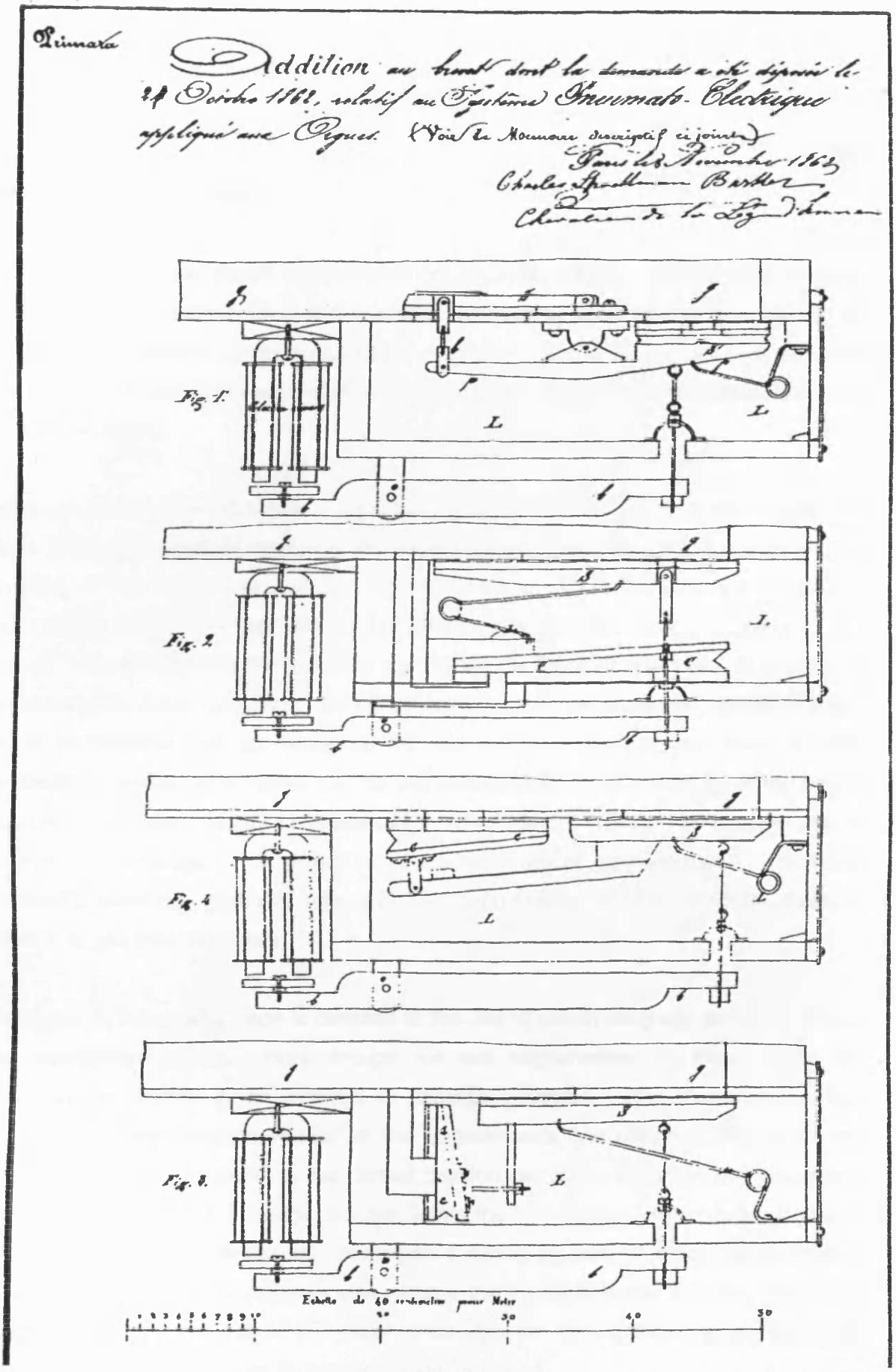

Figure 42 Barker's designs for direct electric and balancier assisted pallets
(drawing attached to the *certificat d'addition* of French Patent No. 56019 AD 1862)

Pechard's patent of 1862

Barker deposited his patent specification on 24 October 1862. Just a few days later, Pechard followed with the first of two patent applications (here we use the spelling he used for his signature in the handwritten *memoire*). In this first patent, Pechard the inventor is influenced by Pechard the organist of the ancient five manual instrument at St-Etienne, Caen.

Although Pechard had difficulties with the heavy mechanical action of this organ, the main thrust of the patent concerns the opportunities offered by electric action for the coupling of the claviers in a variety of combinations impossible with the traditional mechanical action. Pechard, the organist, describes facilities for the coupling of the *grande* to the *positif* and the *positif* to the *bombarde*. That Pechard taught physics at the local *lycée* is not surprising; the six electrical circuits he presents not only provide for all possibilities, but are designed for one cell, two cells, or two pairs of cells connected in series, *vide* Figure 43. All this occupies 35 out of 41 pages of the patent application, as each circuit is explained in much detail. Today, of course, this is schoolboy knowledge. The drawings of the cells, whilst diagrammatic, do indicate Pechard's intention, probably based on his experiments on the Lefebvre organ in 1860-2, to use twin fluid cells.

Hardly more than half a page is devoted to the use of electromagnets for pulling down the soundboard pallets. Here though, we see plagiarisation by Pechard, or the converse by Barker in an attempt to upstage Pechard. The Frenchman's first example is a less elegant version of the Englishman's first offering in his *certificat.* The force holding the pallet in the closed position (ie the air pressure and the return spring) is balanced by a wedge bellows within the soundboard, the moving board of which is connected to the pallet: *'soupapes à contre pression'*. Since the bellows is continually vented to the wind groove without the interposition of a valve, there is a constant relief on the pull of the pallet, thus allowing the relatively small pull of an energised electromagnet for its opening, *vide* Figure 44.

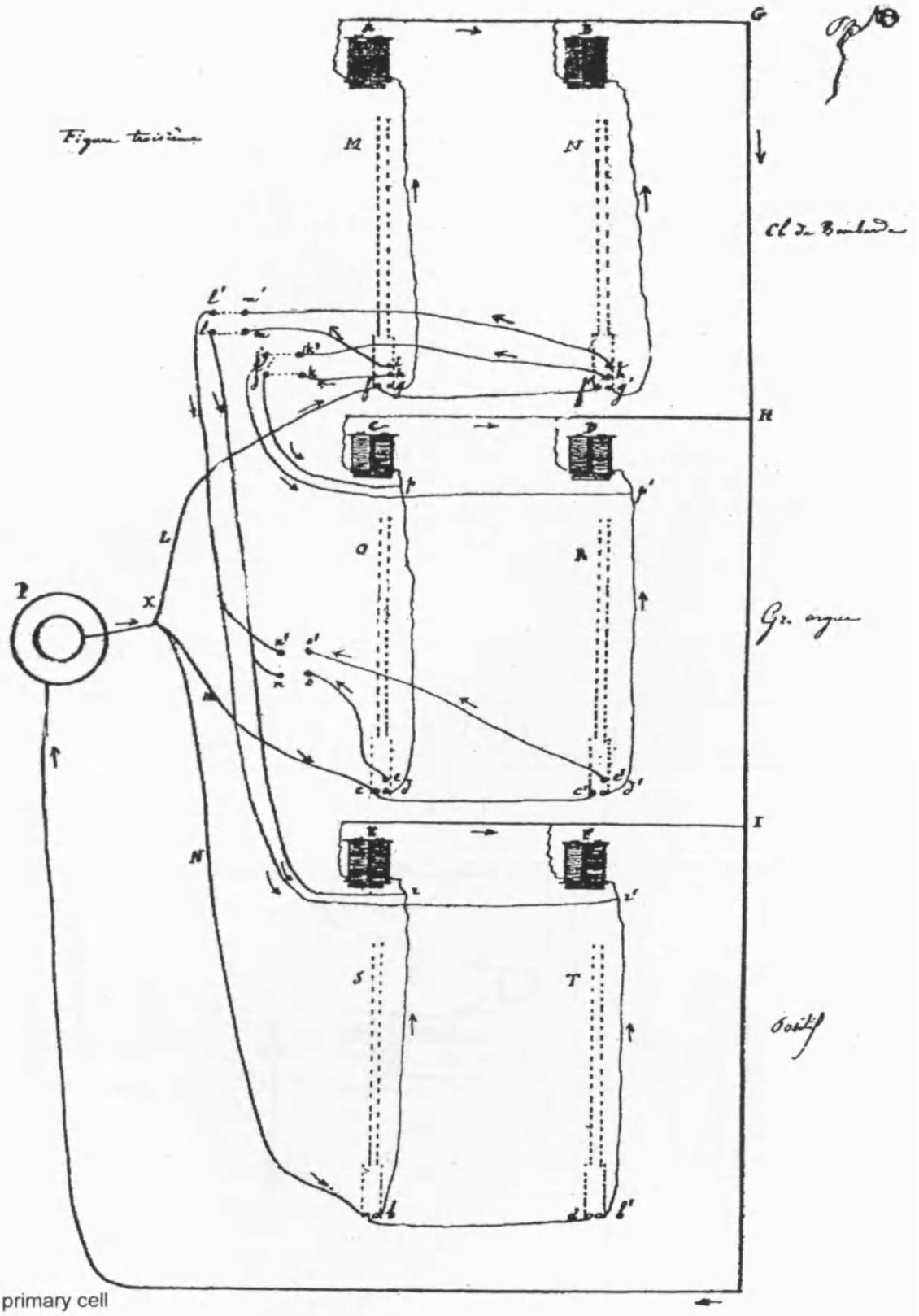

P Single primary cell
A-F Electromagnets
M, N *Bombarde* clavier keys
O, R Grande clavier keys
S, T Positif clavier keys

Figure 43 An example of an electrical circuit for the coupling of a three clavier organ

(Page 10, Figure 3 of French Patent No. 56854 AD 1862)

A Pallet
B Soundboard
C Top board of wedge balancier
E Balancier vent to wind groove
F Wind groove
G Horseshoe electromagnet
K Mechanical lever
M Armature

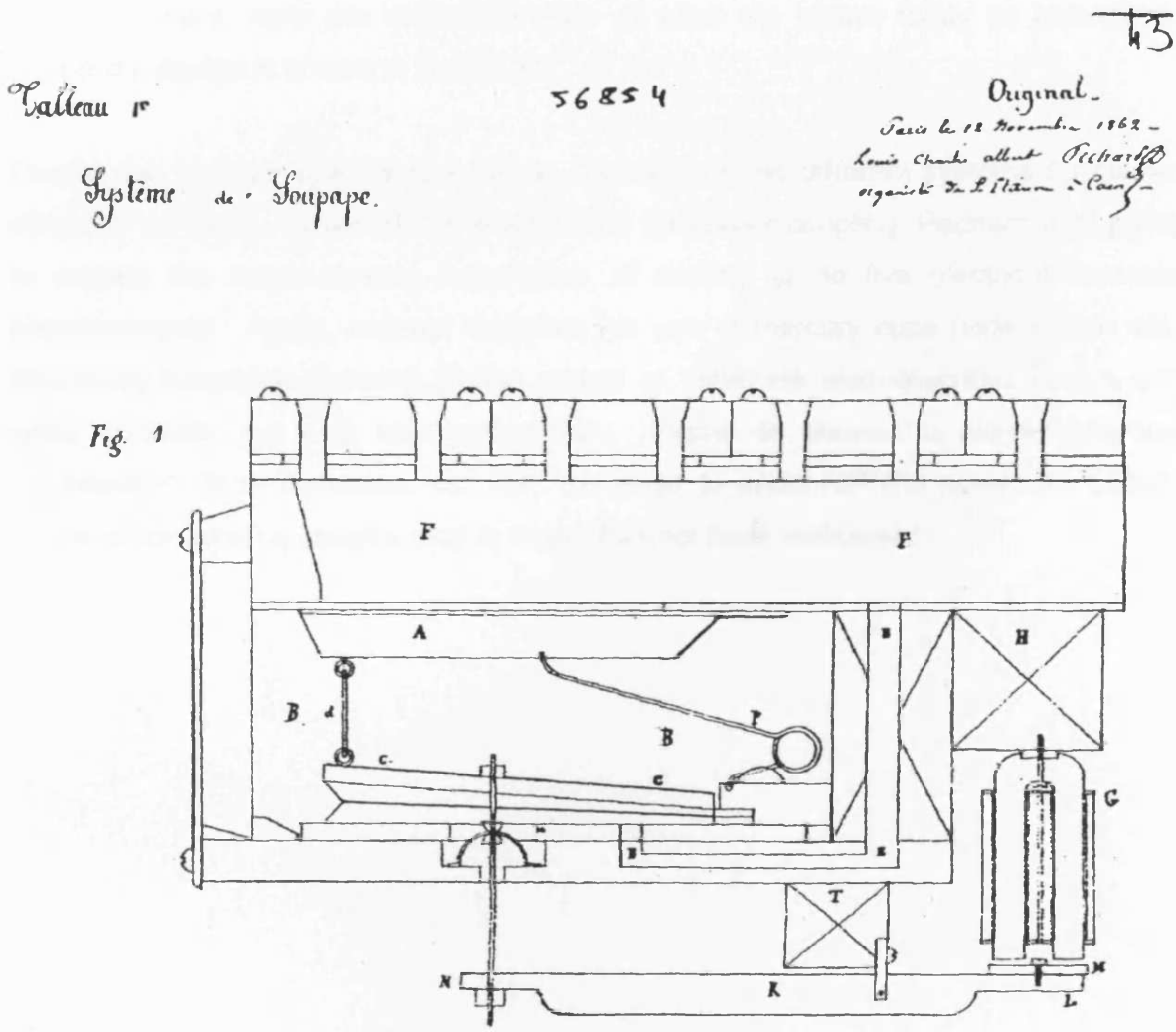

Figure 44 Pechard's electromagnetically operated balancier pallet
(Page 43, Figure 1 of French Patent No.56854 AD 1862)

This system of mechanical relief used in conjunction with mechanical action is discussed by Hopkins and Rimbault, Audsley and others.[89] Willis was aware of this form of relief pallet in the 1860s, although he proposed the use of a flexible airtight diaphragm rather than a wedge bellows. As we have noted with our description of Barker's patent, here are more examples of what are known today as balanciers. Pechard's design is shewn in Figure 44.

Finally, the inventor spends four pages describing three different systems for clavier electrical contacts. Given all the possibilities for clavier coupling, Pechard is at pains to explain the music-making importance of making up to five electrical contacts simultaneously. Again, another surprise: his use of mercury cups (*vide* Figure 45), effectively preceding Barker's British patent of 1868. He also describes spring and slider contacts, but with less enthusiasm. Figure 46 shows his clavier coupling mechanism. It is ingenious, but still, the need to switch off the power for battery conservation when a coupler stop is drawn has not been addressed.

---

89. Hopkins, Edward J. & Rimbault Edward F., *The Organ, its History and Construction* (London: Cocks & Co, 3/1877), p. 70

Audsley, George Ashdown, *The Art of Organ Building*, 2 Vols. (NY: Dodd, Mead, 1905), II, pp. 229-242

Figure 4 Shows a spring return clavier key with four pairs of mercury pots; one pair for the pallets of that division (say the *Grande*), and the remaining pots for the pallets of the three other divisions.

Figure 5 Uses only one large mercury pot for the same duty as Figure 4.

Figure 7 Represents a key with a simple return spring contact at its end without any coupling facility. The key in this example is returned to its resting position by lead counterweights. This does not appear to be a satisfactory solution as there is only a point contact which is likely to have a high electrical resistance, contact burning and mechanical wear.

Fig 4

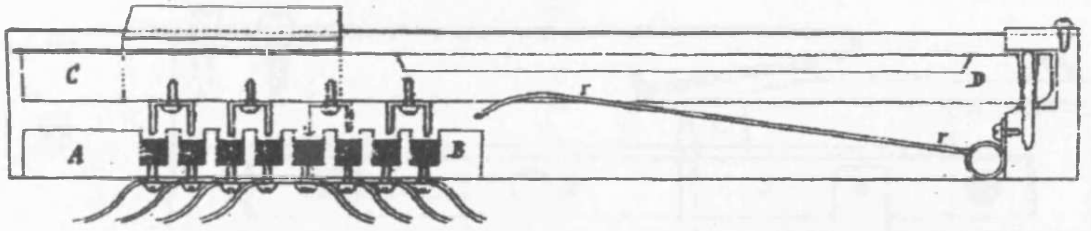

Fig. 5

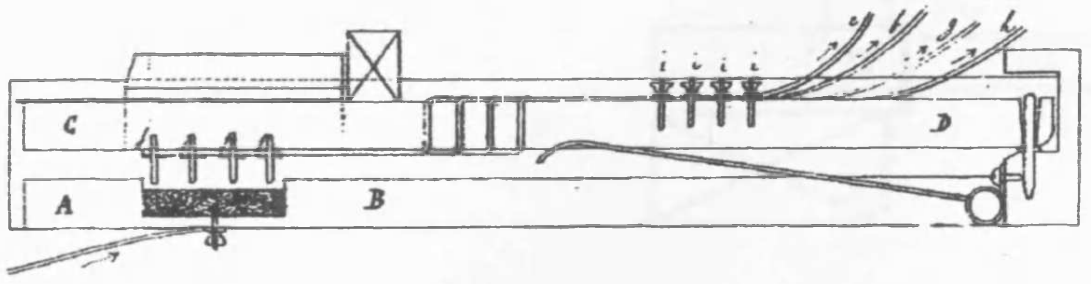

Fig 7

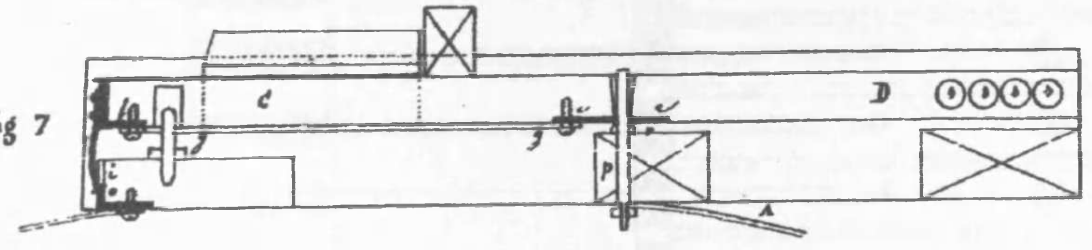

Figure 45 Examples of clavier key contacts
(Page 37 of French Patent No. 56854 AD 1862)

Figure 8 is an elevation view of the electrical clavier coupling switch and the mechanical connection to the drawstop. The angular lever (square) *L* is connected at one extremity to the drawstop. The other end is connected to a slider plate *S* to which is attached a copper contact plate *C*. The spring wire contact *D* is shewn completing the electrical circuit, i.e. the stop knob is drawn. On retiring the top knob, the slider plate is moved to the right, thus breaking the contact between *C* and *D*.

Figure 9 is a plan view of a switch with five ways.

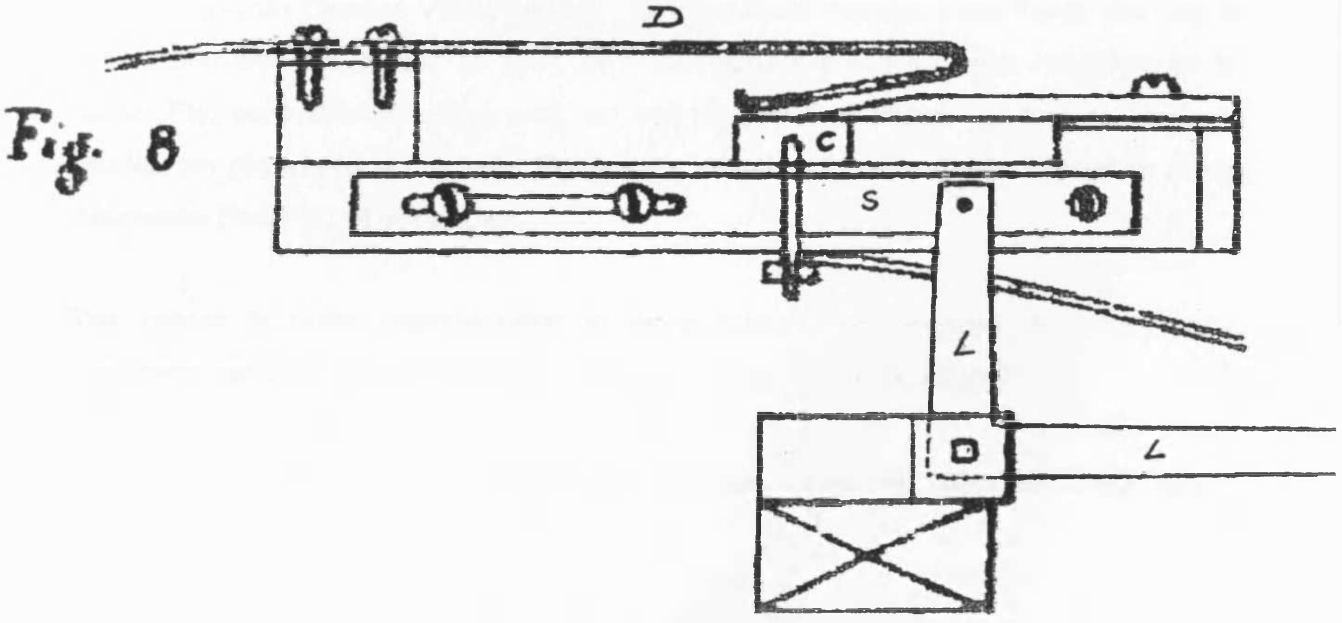

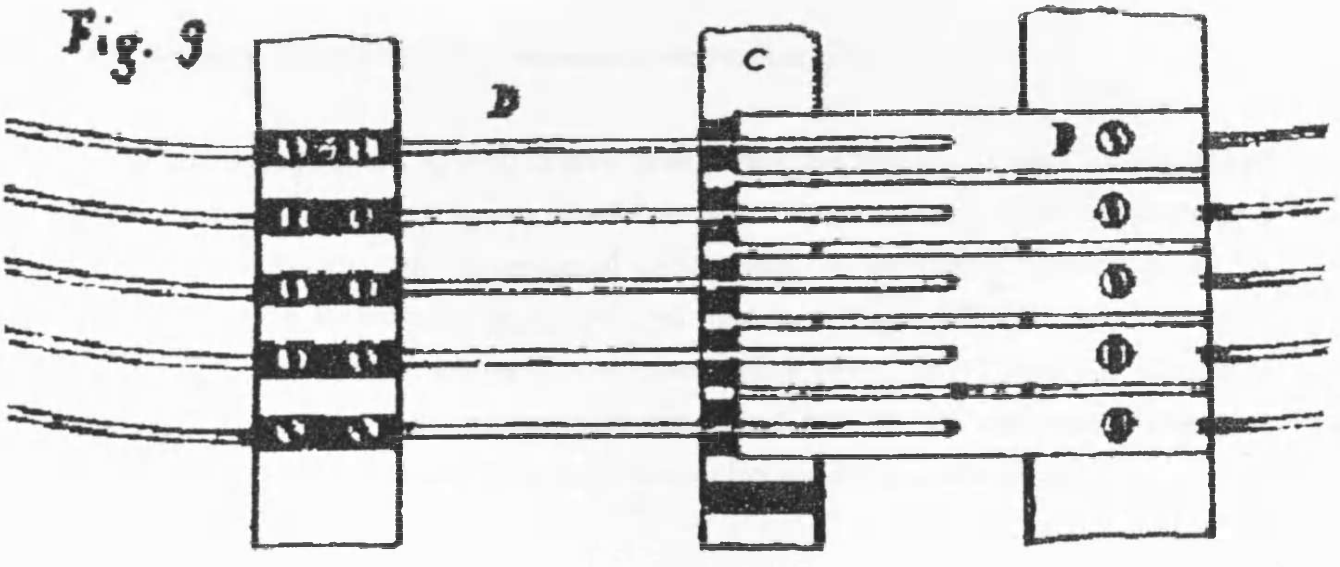

Figure 46 Pechard's electrical clavier coupling stop
(Page 37 of French Patent No. 56854 AD 1862)

Clair and Ferat's patent

Nothing is yet known about Alexandre Clair or and Jules-Alexandre Ferat. Neither is mentioned in Gaultier. One Paul Ferat was Barker's foreman when the latter was a director of Ducroquet in 1845- 1858, and again in the 1860s when Barker went into partnership with Charles Verschneider. Gaultier does mention Paul Ferat, but only in connection with his writing in 1881 of what appears to be an open response to M. l'abbé Ply, *curé d'Issigny-le Grand, au sujt de son livre intitulé La facture moderne étudiée au grand orgue de Saint Eustache.* Whether this Ferat was related to Jules-Alexandre Ferat is not yet known.

The patent is quite unambiguous in its purpose *'un appareil de transmission électrique dans les grandes orgues à tuyaux'*. There are three claims:

1. A means of overcoming the complexity and associated difficulties with mechanical actions

2. An ability to place the console in any location and at any distance from the soundboards

3. A cost no greater than the equivalent mechanical action.

The text is quite short, running to only three pages, but there is an informative page of four figures. This patent is concerned only with a direct electrical action system for a slider soundboard with conventional pallets that, to all intents and purposes, is identical to the earlier patents of Stein and Huot (*vide* Figure 47). The electromagnet is of the horsehoe type, with twin coils connected in series, *vide* Figure 48. Copper is used for all the clavier key contact surfaces, *vide* Figure 49. As with most of the other British and French patents, there is no discussion about the power supply.

A Soft iron armature
D Transverse plank on which the horseshoe magnets are mounted
E Transverse plank
F Lever pivoted at J
G Slider soundboard pallet
H Soundboard
J Pivot fixed to the transverse plank E
P Pallet pull-down

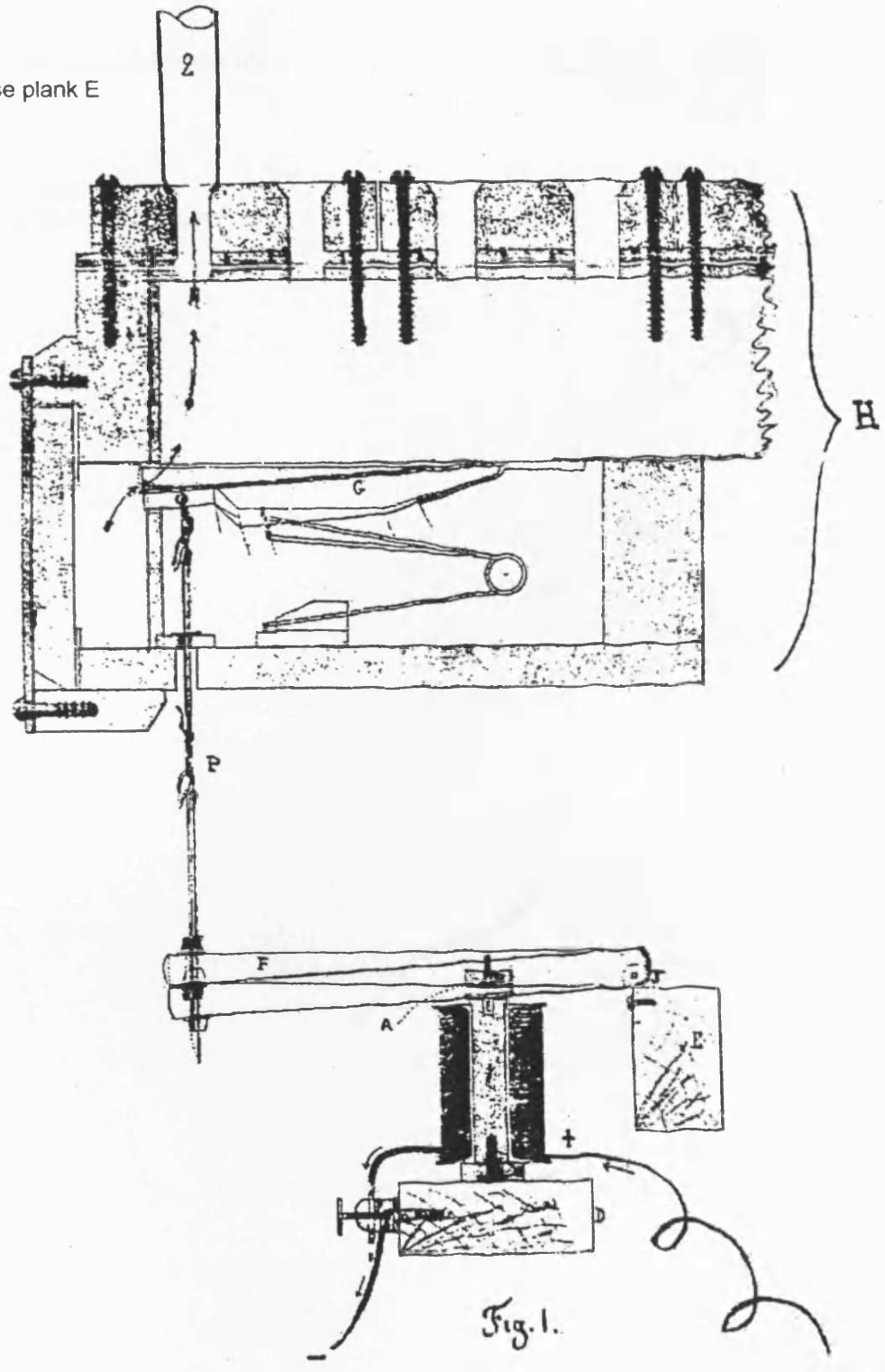

Figure 47 The Clair and Ferat direct electric action
(Figure 1 of French Patent No. 56594 AD 1862)

A Clavier key
C Electrical key contact board
D Transverse plank on which the horseshoe magnets are mounted
E Transverse plank
F Lever pivoted at J
G Slider soundboard pallet
J Pivot fixed to the transverse plank E
M Electromagnet – horseshoe form with the coils connected in series

Plan view

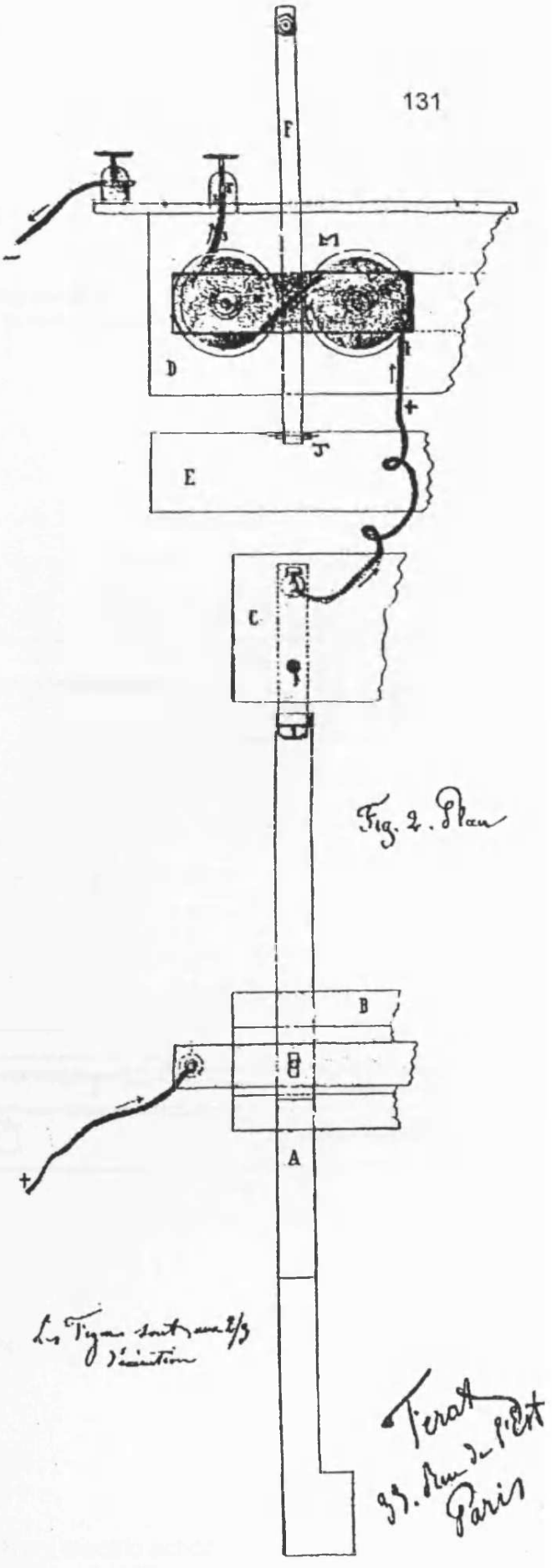

Figure 48 The Clair and Ferat direct electric action
(Figure 2 of French Patent No. 56594 AD 1862)

A Clavier key
d Spring copper strip
FC Fixed electrical contact
KC Clavier key electrical contact

Two types of contact, both based on spring copper strip:
Type 1 uses the spring copper strip to return the key to its resting position.
Type 2 has lead weights inserted into the key end to reum it to ts resting position.

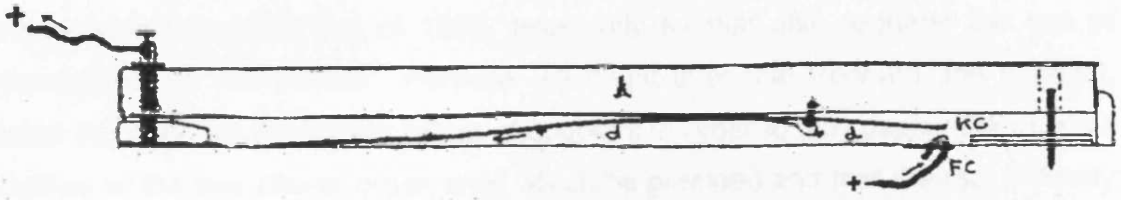

Type 1 key contact

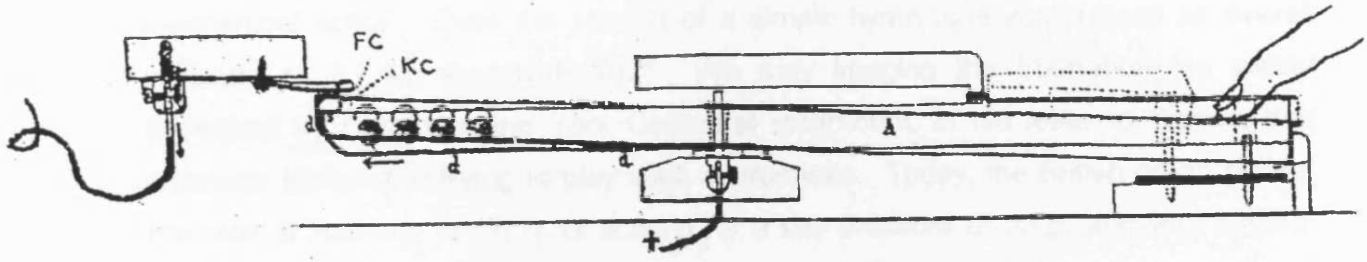

Type 2 key contact

Figure 49 The Clair and Ferat direct electric action
(Figure 2 of French Patent No. 56594 AD 1862)

Pechard's Patent of 1863 and Certificate of Addition of 1864

Five months after first patent application was deposited, Pechard applies for a further *brevet d'invention de quinze années.* Whilst his first patent was chiefly concerned with the use of electricity to provide a wealth of clavier coupling opportunities for organists of the larger organs, this time he described the use of electromagnets for relief of the touch in large instruments. It was a short document of hardly more than 4 pages, with a further two pages of surprising figures; its ultimate significance for direct electric action developments was prophetic. Ordinarily, we would have expected this patent to have preceded that of 1862, especially as that also required the use of electromagnets for the pallets. Perhaps we might infer that Pechard, the organist, regarded the need for the widest range of couplers in order to fully deploy the musical capabilities of the five clavier organ over which he presided and that the real difficulty in playing his instrument stemmed from the manual effort in playing a mechanically (albeit limited) coupled instrument, rather than that required for a single clavier. A key depression pressure of 350 g was not unusual for a single clavier in a large mid-nineteenth century organ; the coupling of another clavier to the *grand* would require a key pressure of at least 700 g and probably 900 g allowing for the additional mechanical action. Even the playing of a simple hymn tune would need an overall pressure of 2.7 kg (nearly 6 lb).[90] We may imagine the frustration, so vividly described by Camidge, the York Cathedral incumbent, in his letter to Barker, that organists endured in trying to play such instruments. Today, the British organ-builder Harrison & Harrison designs its actions for a key pressure of 50 g, and with electro-pneumatic action, that pressure not being exceeded however many clavier, octave, and quint couplers are drawn.[91]

Pechard, the musician, recognised the importance of the prompt opening and closure of the pallets. He noted that the pallet opening pressure (the pluck) was

---

90. Du Moncel, Theodore Achille Louis, Comte, *Éxposé des Applications de l'Électricité* Vol. V (Paris: 1856-1862), p. 84

91. Wooley, Alan, *Actions and Reactions*, University of Reading, M.A. dissertation, 2000 p. 11

significantly higher than that needed to pull-down and maintain open the pallet. He was though aware that the magnetic force diminishes exponentially with the distance between the armature (attached the pallet) and the iron core of the electromagnet of an direct action system: just the opposite of what was needed, the magnet has its least attraction on the pallet when it is closed, and the strongest attraction when the pallet is already open.

His solution to the challenge was brilliant in its simplicity, preceding the magnet design of the US electric action organ-builder, Wicks, by five decades.[92] By placing the core of the magnet at right angles to the direction of pull and replacing the historic soft iron disc attached to the pallet by an iron roller in contact with the core but was offset by 10-14 mm (0.4-0.55 in) from the longitudinal axis of the core, Pechard reversed the strength of the magnetic force and thus ensured the maximum pull on the pallet when it was in the closed position, *vide* Figure 50: *'le principe de la coincidence des lignes axiales et médiennes'*. In the same way, Pechard overcame the problem that Stein and the other direct action inventors suffered: the disturbing clang that occurred when the armature hit the core (this was the problem that the organ-builder Wilhelm Sauer had reported on the Barker demonstration organ at the Paris *exposition* of 1867, *vide* pages 20-21 of this Section).

Pechard described two other systems similar to the above but where he maintained a gap of less than 1 mm (0.04 in) beween the core and the armature (the Wick's magnet, now overtly copied by Otto Heuss, Kimber Allen and others. These magnets not only overcame the magnetic force and noise challenges of the direct contact magnet, but also the residual permanent magnetism of the iron core which slowed, or even prevented the release of the armature after the current was switched–off. These improved systems are shown in Figure 51.

Less than two months after the patent application, Pechard obtained a *certificat d'addition,* this time of 16 pages, including three pages of figures. In this additional

---

92. The Wicks Organ Company 'invented' its DIRECT-ELECTRIC® action in 1914, and built its first organ using 'unit' pipes in 1920. See www.wicksorgan.com

A Horizontally mounted polished iron roller
a-b Roller shaft
f Pallet pull-down
M-N Roller cradle
R Pallet return spring
S Pallet

Note: The highly polished nature of the roller and the electromagnet core in contact with the roller suggest a sliding rather than rolling action. Perhaps Pechard expected both actions.

Today, such a system would be nickel or hard chromium plated to reduce friction, enhance wear resistance and minimize corrosion.

Figures 1 and 2 represent an horizontal horseshoe magnet, whilst Figure 3 shews a vertical magnet that takes up less lateral space under the soundboard.

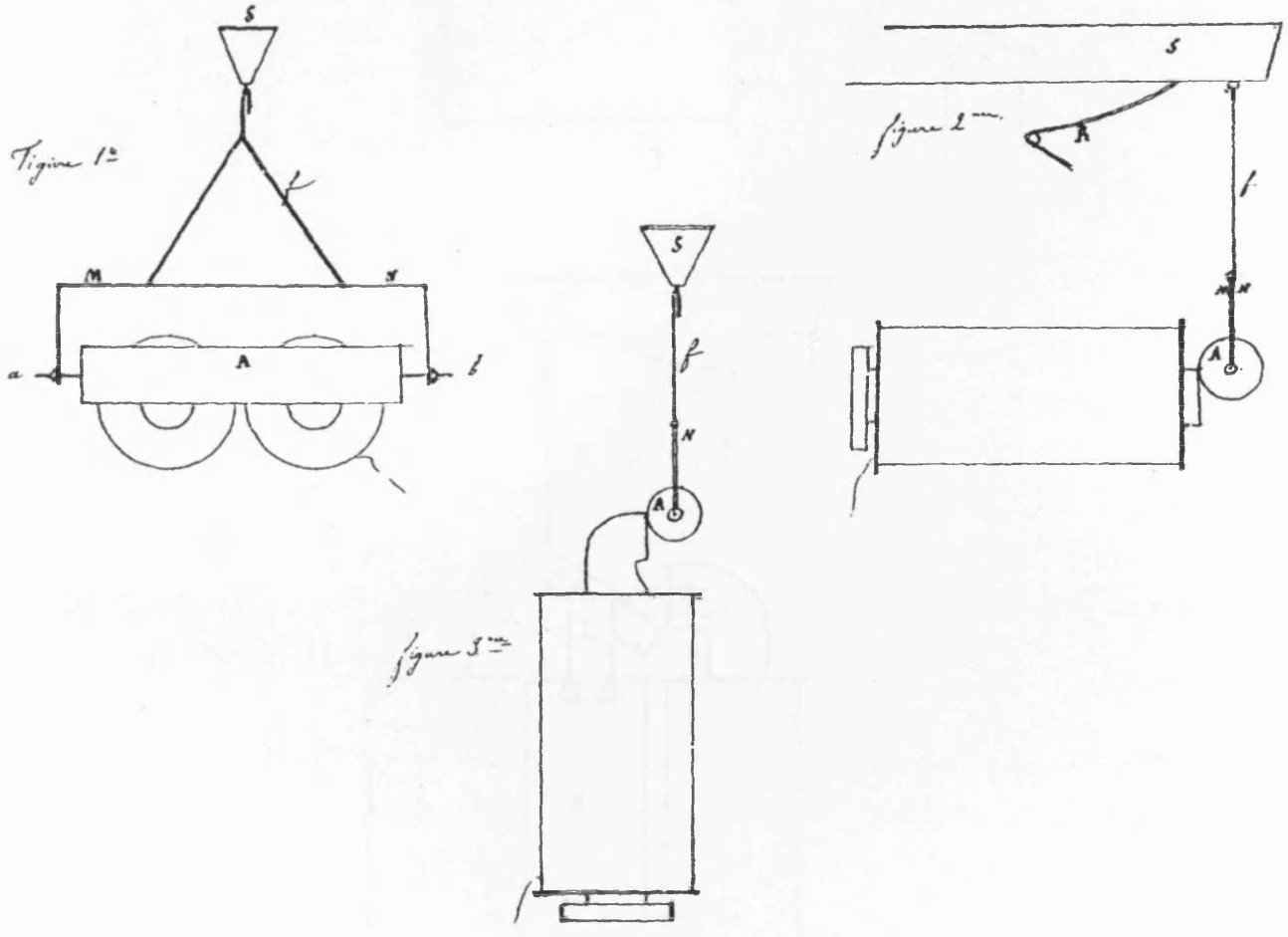

Figure 50 Pechard's direct action system with the roller armature
(Page 6 of French Patent No. 58344 AD 1863)

Figure 4

A-M Hammer type lever armature pivoted
At the further end of the lever
P Magnet core
O Pivot and its support

Figure 5

A Balance twin armature used
with a horseshoe magnet
P Magnet cores
L Pivot
K Pivot support

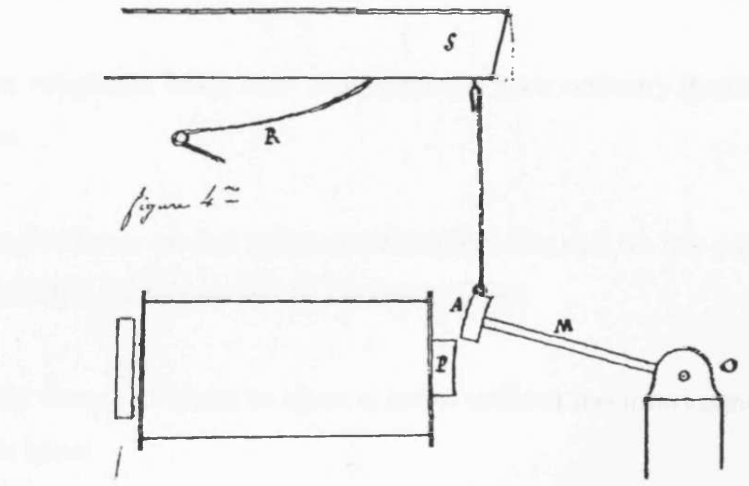

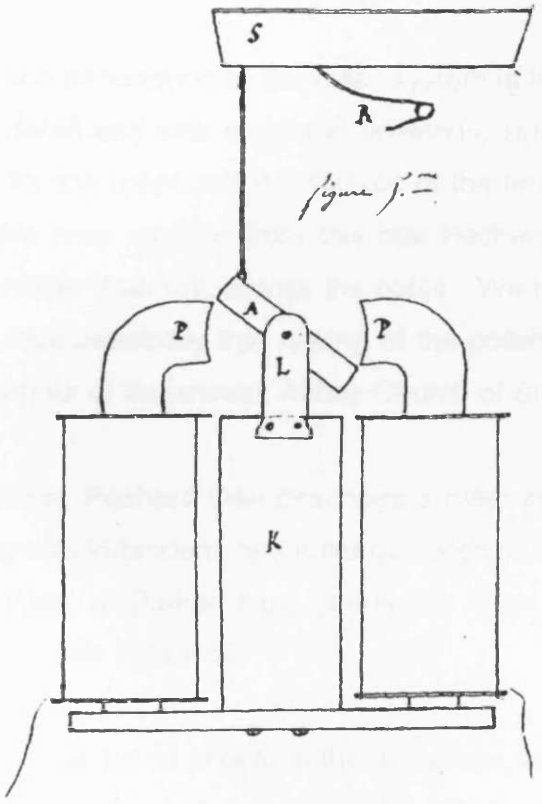

Figure 51 Pechard's direct action system with lateral attraction and a small air gap
(Page 6 of French Patent No. 58344 AD 1863)

material, Pechard extols the advantages of the roller system as a means of avoiding the necessity for a pneumatic lever – except where the power of the magnet is insufficient. Especially, he lists the following advantages:

1. A stronger magnetic force than that obtained from ordinary direct pull armatures

2. The magnetic force on the roller and therefore the pull on the pallet are in accord with the force needed to open the pallet

3. A magnetic force sufficient to open a pallet without the intervention of a pneumatic lever

4. A speed of attack and return that is faster than an ordinary armature

Pechard reiterates the description of the roller system in his base patent specification, but in much more detail and with improved drawings, *vide* figure 52. Particularly, he stresses the need for the roller and the surface of the horseshoe magnet cores to be highly polished. We may assume from this that Pechard's intention is for the roller armature to slide, rather than roll, across the cores. We may wonder though whether he considered the real possibility that rusting of the polished surfaces would be rapid in the cold and damp air of the ancient Abbey Church of St-Etienne.

As an insurance policy, Pechard then describes a roller system using two rollers with two horseshoe magnets in tandem, two roller operated relief pallet designs, and just to cover all eventualities, a Barker type pneumatic lever actuated by a horseshoe magnet *sans rouleur, vide* Figure 53.

Pechard has other ideas for us to note in the document, we see the first description of a device connected to a wind reservoir that removed the electrodes from the electrolyte jar at the end of playing (Barker was to claim this invention in his British patent of 1868). In this context, Pechard supposes a *pile* with a single electrolyte

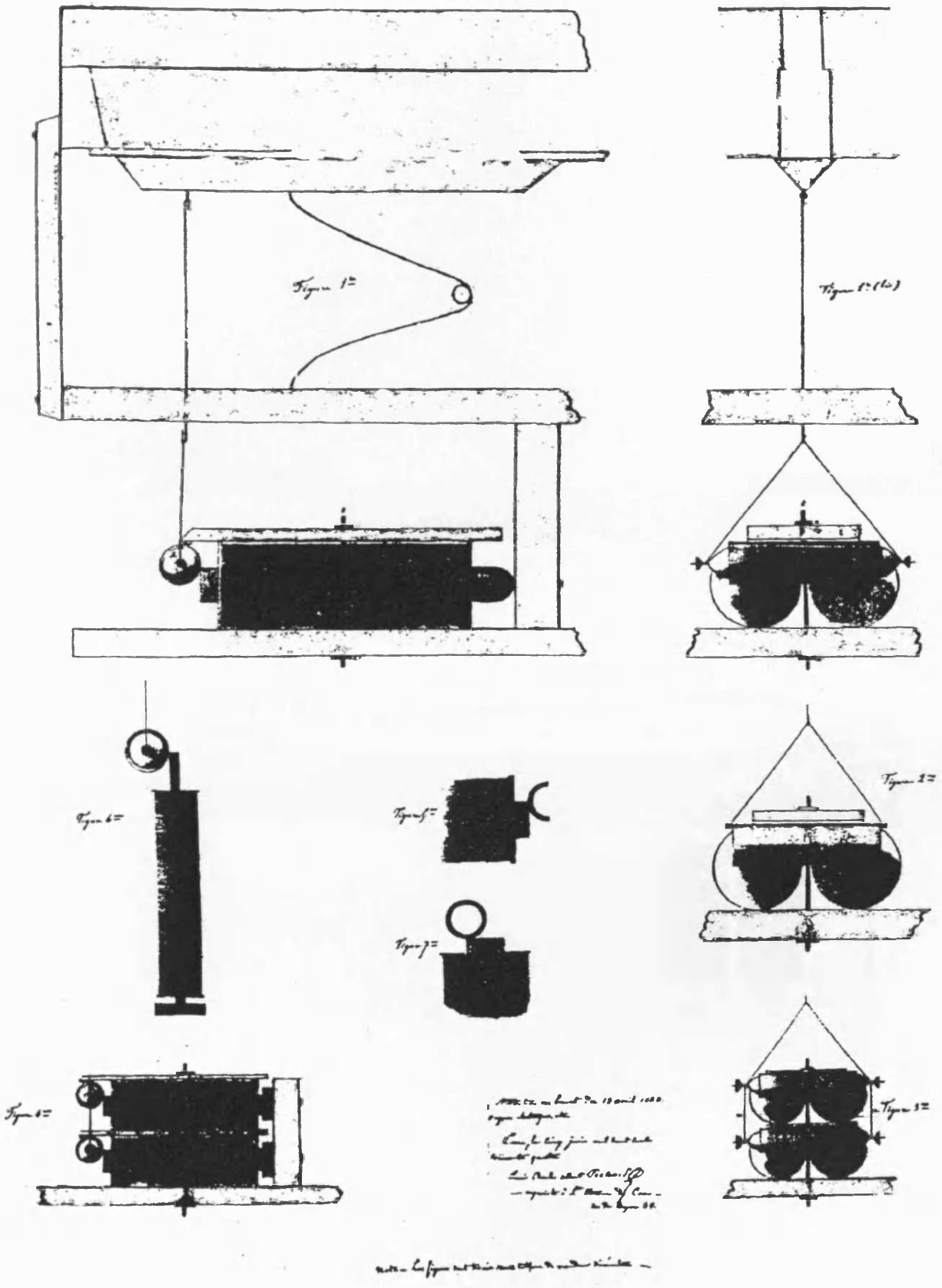

Figure 52 Pechard's improved direct action roller armature
(French Patent No. 58344 AD 1863)

A Soundboard
B Pallet
C Groove
D Pneumatic lever
H Disc valve
J Lever armature

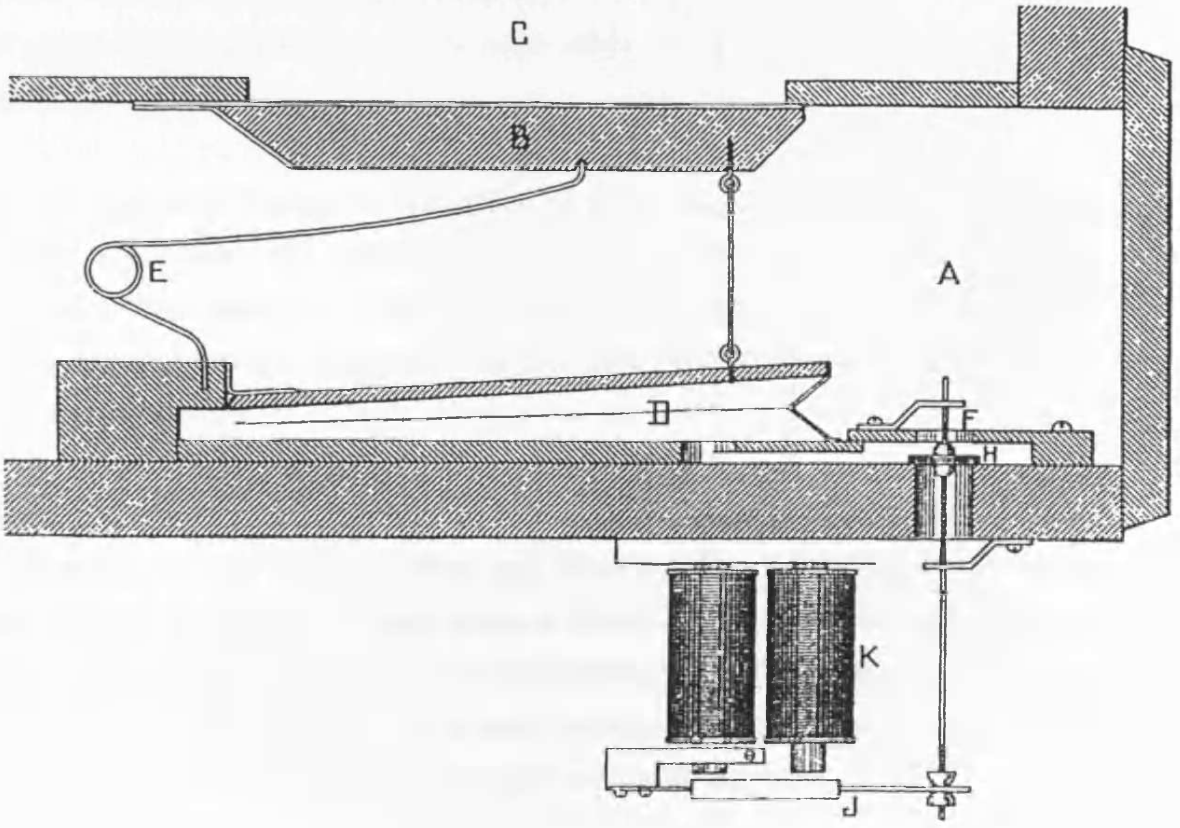

Figure 53 Pechard's electro-pneumatic system
(Page 25 of French Patent No. 58344 *certificat d'addition* AD 1863)

in which are immersed electrodes of zinc and carbon. Whilst the inventor gives no indication of the nature of the electrolyte, I suppose that a simple inorganic acid or salt solution would have an inadequate performance and suffer from hydrogen polarisation. The likelihood is that the Pechard had in mind a bichromate cell. Later on though, he refers to the use of the Callaud cell using zinc and copper electrodes and with a *'grande surface'* for the simple electro-pneumatic actions foreseen by Peschard and Barker. This type is a modified Daniell cell, but with the same low potential of 1.1 V, so a series connection of two or more cells would be necessary. In any event, I would regard this type of cell as being entirely unsuitable the high power output called for by upwards of 30, or even more, magnets in the playing of a fully coupled organ.

Finally, we must note Pechard's description of a tremulant that he called a *tremblant ou staccato électriqué*. The principle of operation is that of a simple electric bell with its oscillating bell hammer. What use Pechard envisaged for a tremulant that inherently had a frequency of many cycles per second escapes me, but he returns to the idea in later writings.

We have already observed that although collaboration between Pechard and Barker had commenced in 1861, before either had taken out patents, the application dates suggest that the two inventors were trying to trump each other in an attempt to win priority for the key technical areas. The commercial and collaborative nature of their relationship is discussed later, but it is worth summarising the technical claims of the Barker and Pechard patents. In chronological sequence, we have:

Inventor	**Patent date**	**Main invention**
Barker	24 October 1862	electro-pneumatic system
Barker	8 November 1862 (*certificat d'addition*)	electro-balancier system
Peschard	12 November 1862	electro-balancier system clavier coupling mercury key contacts

Peschard	13 April 1863	direct electric action with rollers
Peschard	6 June 1864	direct electric action with rollers Electro-pneumatic action auto-withdrawal of electrodes

I am left with the feeling that during 1862-3, perhaps Barker, but certainly Peschard, were uncertain as to the most likely practical system:

Direct electrical action
Direct electrical action with balanciers
Electro-pneumatic action

Eventually, Peschard had to support Barker's decision for the promotion of the electro-pneumatic action, given the inadequacy of the available batteries of the time. But he always felt that, given a powerful electrical supply, the direct route would offer more reliability for the organ-builder and a better response for the musician.

Bryceson and Morten's patent

Bryceson's British patent specification for his pneumatic pallet and electrical stop control inventions was deposited on 6 April 1868. Exactly six months later, a French application was made for the same inventions. The deposition was made by the *cabinet de Brandon & Morgan-Brown, ingenieurs* of 13, rue Gaillon, Paris, and presented on its behalf by Henri Aguerra. The name Brandon & Morgan-Brown suggests a British business, probably founded to assist in technology transfer between the two countries. Its role in this case would surely have been the translation of the technical terms in Bryceson's British patent text.

Whilst the British text was nine pages, the French version ran to eleven pages. At least the French drawn figures were identical to the British in both detail (albeit of poorer quality) and numbering. The opening recital recognised the prior art of the *Brevet anglaise* of 6 April 1868.

Benay's patent

Neither Marie-Alfred Benay nor his credentials as an organ-builder are yet known. His reference to *anches* in the preamable of his invention suggests that he was a manufacturer of harmoniums: *'L'application aux orgues d'eglise* ***ou anches*** *d'un systèm de transmission électro-magnetique.....'* His name does not appear in Dieterlen, Fleury, or Gaultier.

Benay calculates that a mechanical action organ of three claviers has 594 mechanical pieces connecting the claviers to the soundboards. He further states that the finger pressure needed at an uncoupled clavier is 250 g, increasing to 750 g for fully coupled claviers. He comments on the negative effect that varying atmospheric conditions can have on mechanical action, and that all these problems can be avoided by wires and a Bunsen cell. Indeed, it is now possible, he says, for an organist to play the *grand orgue* and the *Choeur orgue* from the same position and at the same time. This, therefore, is yet another patent for direct electrical action. But again, with no substantial difference from the earlier French direct action patents. There is notable difference though: Benay places the electromagnets within the soundboard so that they act directly on armatures attached to the pallets, thus avoiding the necessity for a pull-down wire and its associated adjustment difficulties.

Well, we now have definitive confirmation that the Bunsen cell was a preferred power supply in France. Furthermore, we also know from Benay's Figures that he proposed one Bunsen cell for each clavier. His system is shown in Figures 54 and 55.

M. A. BENAY — ORGUES ELECTRIQUES

Fig. 1

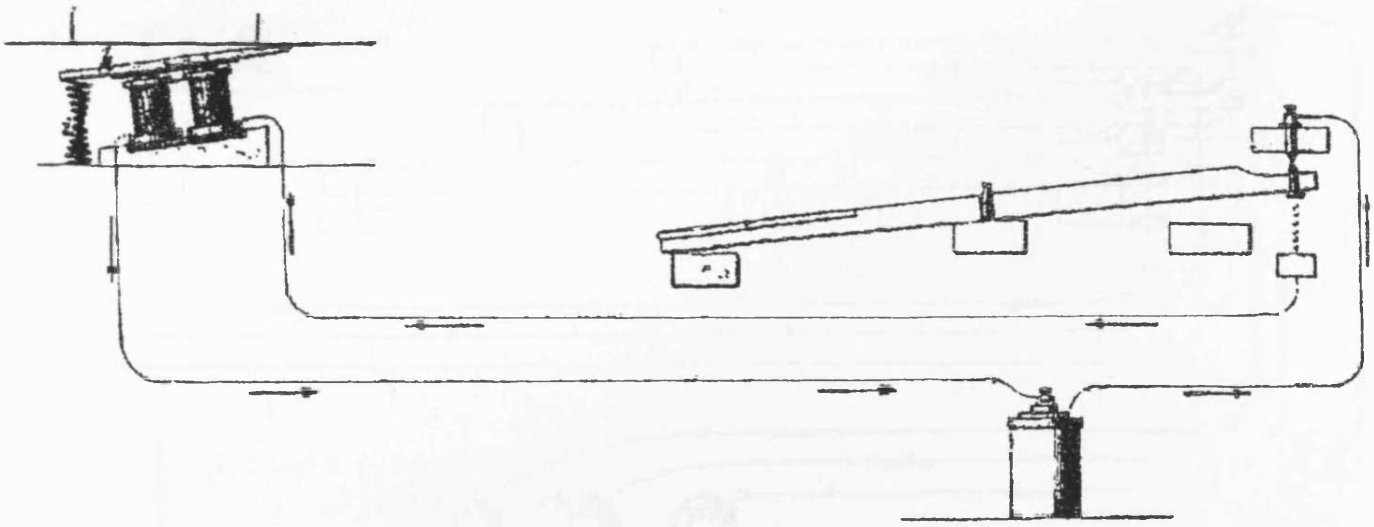

Fiigure 54 The Benay direct electric action system
(Figure 1 of French Patent No. 89443 AD 1870)

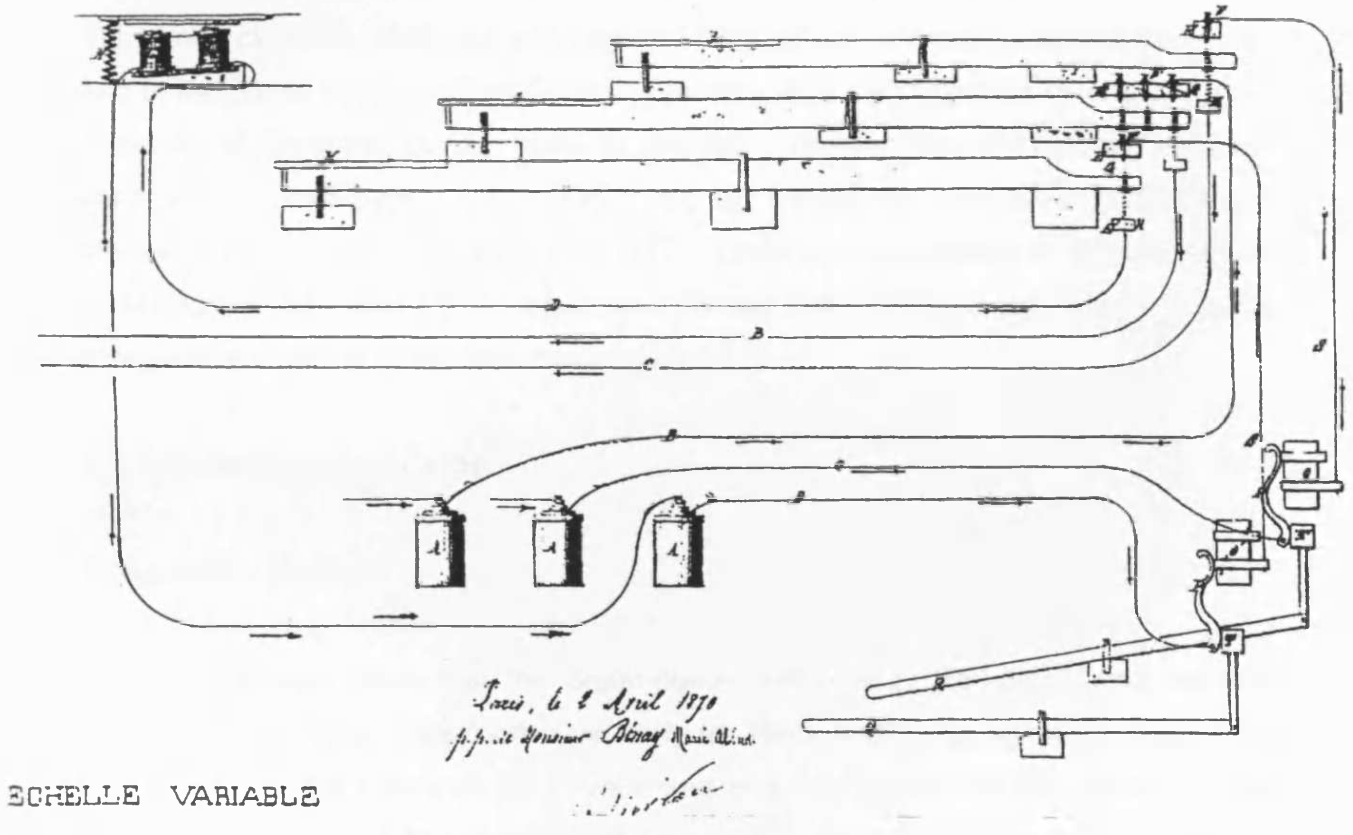

Figure 55 The Benay direct electric action system – clavier coupling
(Figure 2 of French Patent No. 89443 AD 1870)

3.3.3 German patents

The first patent law covering the unified states of Germany and the founding of a patent office occurred in 1877, although patents had been granted in the separate states for many years before. Some of these are described and listed in an article published by the Journal of the Patent Office Society in 1961. The earliest records of patents granted in the various states during the nineteenth century up to 1877 are held in lists in the SRIS Library. Patent specifications that were not destroyed in World War II remain in the old state archives. The British library does have some material, but all handwritten in *fraktur*.[93] The 1877 act was updated in 1891 and revised in 1936 when the term of the patent was increased from 15 to 18 years. World War II caused considerable disruption to the system and the Reich Patent Office was closed in 1945, but with regional filing offices in West Berlin and Darmstadt and in the Soviet sector of East Berlin. A patent office was established for the Federal Republic of Germany during 1949 in Munich. The German Democratic Republic introduced its own patent law in 1950. So far, I have not been able to identify any electric action organ patents prior to 1877. There are two patents of no special note taken out in 1880 and 1886 (*vide* page 25) and three Hope-Jones patents in 1893, these being identical to his British equivalents.

3.3.4 United States patents

Roosevelt's patents

We have already seen that the organ-builder Hilborne L. Roosevelt was active in electric action organ construction as early as 1868 or 69. He seems to have been well versed in the elements of science and engineering, as his first patent of April 1869 demonstrates.[94] The objective of his invention was: 'the application of electricity from a battery, or other source to the operation of organs, so that the keys can be played at a suitable distance from the organ, and without difficulty'.

---

93. Chapter 5.1 of a British Library Patents Collection document dated July 1992, kindly supplied to me by Stephen van Dulken on 13 April 2004

94. US Patent No. 88909 of 13 April 1869

Unlike the French and British inventors, Roosevelt addresses the principal difficulty faced by organ-builders: the demand on the power supply and the limitation in this respect on the available batteries of the time. We read: 'The invention consists, first, in providing a separate battery for each octave of the organ' and, it is necessary in every magnetic action applied to organs to have sufficient battery power to actuate at least ten magnets (sometimes more), at one and the same time, and it must also be remembered that the lower notes require much more power than the upper ones'. Now we have a gross misunderstanding of Ohm's law: Roosevelt says that the battery power to play a chord will be 'thrown upon' singly played notes 'as it would be when running passages are played' and thereby 'destroy the connections by burning, in spite of the best contrived circuit-breakers, and must also waste the battery'. This, then, is Roosevelt's reason for having a battery for each octave. It is easy for us to understand that a battery capable of supplying the power for ten magnets, say 20 A at 2 A per magnet will only supply 2 A if a single magnet is energised. We may infer, therefore, that Roosevelt's experience was related to magnets which potentially drew too much current and were therefore oversized for the task, but with a power supply that whilst barely sufficient for ten magnets to pull down the pallets, was easily able to supply the full power, albeit unneeded, for one magnet. Hence the sparking and burning of the associated key contact.

The second part of the invention consists in the use of a layer of glycerine placed on top of the mercury in the contact pot. Two purposes are served, the first, to prevent the evaporation of the mercury, and second, to protect the key contact from oxidation on its withdrawal (*vide* Figure 56 for the electrical and mechanical design).

Roosevelt is precise on the nature of the battery cells. The battery for each octave is made up of 'six Smee, or other cups, with the appropriate connections. which is enough to do all the necessary work and actuate all the required magnets on that octave without burning or waste of the battery'. Alfred Smee, an Englishman, invented a single fluid cell in 1840, based on a pair of amalgamated zinc electrodes,[95]

---

95. Alfred Smee (1818-1877), scientist, surgeon to the Bank of England, pioneer in electro-biology and landscape gardener. Bakewell, F.C., *Manual of electricity* (London: 1859), p.147

A Clavier key
B Mercury pot (independently above the clavier)
C Pallet with projecting arm *b* attached to the armature
c Pallet return spring
D Armature
d Key return spring
E Horseshoe magnet
G Battery
J Pedal
Q Pedal pallet (slider pallet which opens air holes into the groove when it is activated)

Note the unusual lever pallet. This must have required a powerful magnet to work against a negative mechanical advantage of 2.7:1.

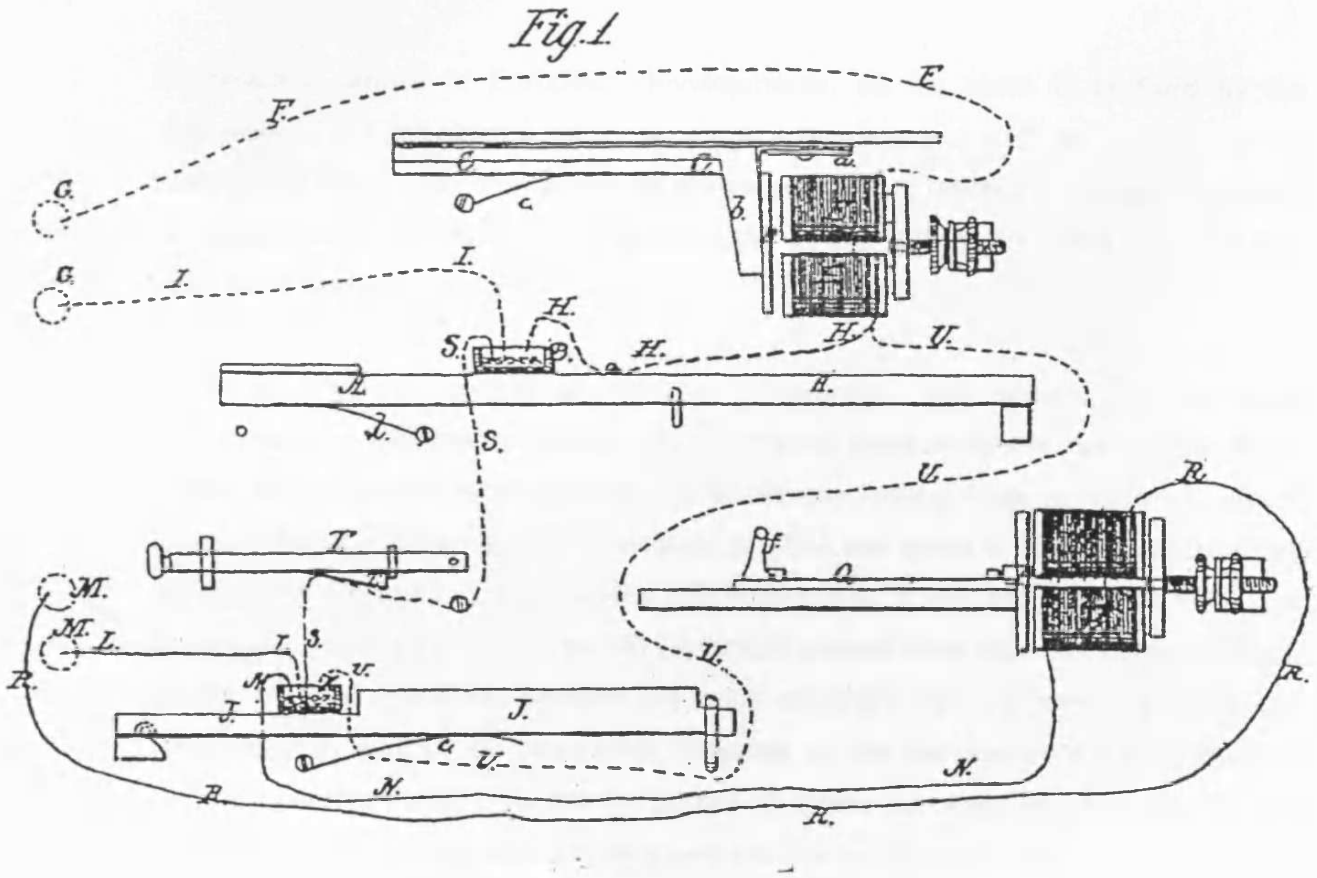

Figure 56 Roosevelt's direct electric action with mercury pot key contacts
(Figure 1 of US Patent No. 88,909 AD 1869)

between which was placed a silver electrode covered with finely divided platinum. The electrolyte was dilute sulphuric acid. The purpose of the platinum was to assist in the release of hydrogen bubbles and therefore offset polarisation. As the Smee cell had a voltage of only 0.5 V, Roosevelt's electrical connection in series of six cells would have provided 3 V. Whilst the cell had a low cost of maintenance, it was mainly used for open circuit work where there was only a light drainage of current. Not altogether the best choice of cell for the operation of powerful direct action pallet magnets. We saw earlier that Roosevelt's electro-pneumatic system five or six years later used twin fluid cells of the Grove type.

Roosevelt is aware of European developments, as his claim is prefixed by the statement: 'I do not claim broadly an electric organ-action, as I am aware that the same is not new'. He does regard his claims as novel in respect of a separate battery for each octave, the covering of the mercury in the contact pots with glycerine and three other lesser inventions.

Roosevelt's second patent of 1876 is a surprise. His experience with pallet electromagnets must have caused him to consider electromagnetic applications more widely, for this patent is concerned with electro-mechanical locks (a modern example is the motor car lock). More interestingly, in 1874 and again in 1875, he became the assignee of Georges L. Leclanché's US Patent Nos. 5,768 and 5,679 of 1874 and Patent No. 165452 of 1875. The US Leclanché patents stem from the seminal French patent of 1868 recording perhaps the most important development in primary cell technology for almost 100 years (*vide* Appendix II), and the basis, not only for most of the dry batteries sold today, but the battery of choice for Lewis, Hope-Jones and the other builders of electric action organs well into the twentieth century.

3.3.5 Patents summary

A chronology of patents is given below:

1850s (two patents)		
Stein	2 February 1852	No. 12988 (Fr)
Gauntlett	15 July 1852	No. 14222 (GB)
1860s (thirteen patents)		
Huot	1 June 1860	No. 45373 (Fr)
Martin	17 July 1861	No. 49656 (Fr)
Barker	24 October 1862	No. 56019 (Fr)
Pechard	12 November 1862	No. 56854 (Fr)
Clair and Ferat	12 December 1862	No. 56594 (Fr)
Pechard	13 April 1863	No. 58344 (Fr)
Goundry	10 October 1863	No. 2490 (GB)
Goundry	24 May 1864	No. 1292 (GB) provisional
Barker	22 January 1868	No. 232 (GB)
Bryceson *et al.*	6 April 1868	No. 1149 (GB)
Bryceson *et al.*	6 October 1868	No. 82648 (Fr)
Roosevelt	*13 April 1869*	*No. 88909 (US)*
Bryceson *et al.*	6 October 1869	No. 340 (GB)
1870s (two patents)		
Benay	2 April 1870	No. 89443 (Fr)
Bishop	14 December 1870	No. 3279 (GB)

1880s (seven patents)

Thibault	29 June 1880	No. 137517 (Fr) not reviewed
Schmoele and Mols	1 July 1881	No. 143960 (Fr) not reviewed
Schmoele and Mols	27 July 1881	No. 3294 (GB)
Willis, Vincent	20 January 1885	No. 819 (GB)
Willis, Henry	23 February 1885	No. 2443 (GB)
Debierre	1 October 1888	No. 193217 (Fr) not reviewed
Casson	1 July 1889	No. 10638 (GB)

1890 (one patent)

Hope-Jones	30 September 1890	No. 15461 (GB)

Excluding any unidentified patents from other countries, there were 25 patents taken out in Britain, France and the United states for the period 1852-90:

Country	**Number**	**%**
France	12	48
Britain	12	48
United States	1	4

The split between direct electric action, balancier assisted direct electric action and electro-pneumatic systems is:

Action type	**Number**	**%**
Direct	10	40
Balancier assisted direct	2	8
Electro-pneumatic	12	48
Clavier key contacts	1	4

The number of patents attributed to the leading inventors is:

Name	Number	%
Bryceson *et al.*	3	12
Barker	2	8
Goundry	2	8
Pechard	2	8
Schmoele and Mols	2	8
Willis (the firm)	2	8
Others	12	48

Pierre Stein's seminal patent of 1852 gave an in-depth exposition on direct action technology, and his model organ for the 1855 Paris exhibition gave a physical reality to his work. France therefore, has the honour of being the first country in the world to publish an electric action patent. The date was 2 February 1852 and the inventor, Pierre Stein. The only other patent issued in the 1850s was to Henry Gauntlett in July 1852, in which he acknowledges a contribution from overseas. There is, though, only circumstantial evidence of a connection between the two men.

It was not until the 1860s that organ-builders in France and England began to take electric action seriously, with the construction of several instruments in accord with the Peschard-Barker technology. This decade saw thirteen patent applications, of which seven were in France, five in Britain and one in the United States. Although direct action on the Stein principle accounted for five applications, we can see that the transition to the energy efficient electro-pneumatic system took only ten years.. My technical review of Barker's 1862 patent, confirms that he simply grafted Peschard's work with electromagnets onto to his eponymous pneumatic lever. Only his *certificat d'addition* reflects his consideration of earlier relief pallet designs described by Hopkins and Rimbault and by Henry Willis: the novelty merely lying with the pulling down of the relief pallet with an electromagnet.

On the other hand, Pechard's patent, deposited a few days after, describes a similar approach to the relief pallet. It is not until the 1863 Pechard patent, and then only in the *certificat d'addition* of 1864, is an example of an electro-pneumatic action described. Even then, Pechard saw the dual system only as an interim solution pending the development of improved electrical power sources, a development that did not come to fruition until his old age. What can be said though is that Barker and Pechard accurately described the balancier assisted direct electric action presently used by several builders for their larger organs.

Peschard's[96] electro-pneumatic system was used by the Peschard–Barker–Verschneider consortium to build the St-Laurent organ in Salon. Then, in 1867-8, Barker built the St-Augustin organ, the reference instrument for Henry Bryceson and his speedy decision to acquire a licence from Barker, albeit subject to his deposition of a patent specification in Britain. It is the outstanding engineering presentation in the Barker patent of 1868 that defines the culmination of Peschard's experiments with the St-Etienne organ and Barker's operational experience from the Salon organ, and sets the stage for the first phase in the progress of the electric action organ.

So, the remainder of the 1860s firmly established the electro-pneumatic concept where the work of pulling down the pallet was allotted to a pneumatic motor. The 1870s saw only two patents, one French and one British, reflecting the growing lack of confidence in electricity for the organ. In the early 1880s, electricity came to the fore again in France with the Schmoele & Mols patent which described the employment of two pneumatic motors in series, thus further reducing the work done by the electromagnets and ensuring a corresponding reduction in the current draw from the battery. This concept may be said to be the second phase of development in the electric organ, although Peschard was later to claim that the use of two power bellows in series was foreseen by him and employed by Barker for the St-Pierre de Montrouge organ in Paris.[96]

---

96. Peschard, Albert, *Les premières applications de l'électricité aux grandes orgues* (Paris: Larousse, 1890), p. 66. Note that I use the spelling 'Pechard' when referring directly to his patents and the more conventional 'Peschard' on all other occasions.

Schmoele and Mols were US citizens working out of Antwerp who made a licence agreement with Merklin, a Belgian organ-builder with its strong base in France. Perhaps this is where the story attributing the invention of the electric organ to America started; a story that deeply upset Albert Peschard in his old age and caused him to write a polite but pointed pamphlet in rebuttal.[97] Merklin built many large electric organs in France, always fighting for contracts in a period in which the influence and prestige of Cavaillé-Coll and the Barker lever still reigned supreme. Before leaving France, we should mention Thibault's patent of 1880. It appears to have had no relevance to French organ developments and nothing is heard of the principle of the invention until the 1920s when the Wicks Organ Company's invention concerning the use of an electromagnet for each pipe (later known as the unit pipe chest), described the same system.[98]

Henry Bryceson and his brother, together with the chemist, Thomas Morten, had seized the Barker technology with such enthusiasm that by the end of the 1860s, they not only had a licence from Barker who was still in France, but had patented their own improvements to the extent that the firm had actually constructed more electric organs in the late 1860s than Barker had affected in France. Bryceson Brothers continued to build a very few organs in the early 1880s against growing disenchantment with battery problems, but in 1885 the firm was awarded a Gold Medal at the International Inventions Exhibition in London for a substantial electric organ, still based on the Peschard-Barker system.[99] Henry Willis, for his part, resolutely set against the new fangled electricity, was forced to build an electric organ for Canterbury Cathedral, as the Chapter's requirement for a console in the chancel and the pipes a long distance away in the triforium could not be satisfied by the then fashionable tubular pneumatic solution.[100] We have already noted the possible intervention of Bryceson in providing know-how and expertise. This instrument, though, was the end of the line for the Peschard-Barker technology in Britain, at least until reliable electric mains supply

---

97. Peschard, Albert, *L'orgue électrique n'est pas d'origine américaine* Paris, July 1892, B.N., pièce 8° V 9228

98. http://organ.wicks.com/additions/directelectric.htm

99. Bryceson Brothers centenary publicity literature, *Bryceson Bros Organs* British Organ Archive, Bryceson file. See page 175

100. Canterbury Cathedral archive, DCC/CA 14 (March 1885), p. 6

appeared in the late 1890s. In the meantime, Robert Hope-Jones, an amateur organ-builder, appeared on the scene to reawaken an interest in electric action with his 1890 patent and little dry cells on the Leclanché pattern: this was the system that with little change was to become, in other hands, the pattern for the twentieth century. Hope-Jones was a prolific patentee during his remaining years in England, with at least fourteen patents concerning improvements to the pipe-organ.

Which of the patentees paid the renewal fees through the life of the patent? We are on safe ground in assuming that Barker and Peschard did not even pay the first renewal fees for their electric action patents since both specifications were not listed in the official *tomes*. The other French patentees in the period must at least have paid the first renewal fee, but there is now no way of determining whether they paid over the full term. In the case of the British patents, it is possible to work through the annual Patent Gazettes which contain patent renewal data, but the task is Herculean. We may assume that organ patents did not differ from the average expectation of around 10% remaining valid for the full term of fourteen years.

Did any of the patentees make financial profit from their inventions? Peschard as a collaborator with Barker in the three Salon and Paris organs probably had one or more payments from Barker who was the lead contractor. There is a suggestion in Peschard's letters[101] that all was not well in his relationship with Barker, but his writings indicate that he was too much of a gentleman to make it public .[102]

During Henry Bryceson's meetings with Barker in Paris, at which an understanding was reached over the licensing of the Barker technology for England, it was agreed that Barker would take out a British patent, thereby strengthening Bryceson's position in his home country.[103] We note that Barker did not assign his patent to Bryceson

---

101. Hinton, *Story*

102. Peschard, Albert, *Les premières applications de l'électricité aux grandes orgues* (Paris: Larousse, 1890), p. 84

103. Bryceson, Henry, 'Description of the Electric Organ', *J. Soc. Arts* 840 (December, 1868), p.84

but retained ownership: a decision which encouraged him to withdraw from the draft agreement, following his concern that Bryceson, as his sole agent, would not do as well for him in the market place as he could himself achieve if he held agreements with several organ-builders. In breaking out of this agreement, to leave his first licensee facing the potential competition from the likes of Hill and Willis, Barker must have given a free gift to Bryceson. In the event, Barker, with his base in Paris, only succeeded in attracting August Gern, late foreman of Cavaillé-Coll and Company, to the fold in 1870.[104]

Merklin is said to have built at least 20 electric organs in France and its Empire during the 1880s, using the Schmoele & Mols patented system and for which it had the exclusive licence for France.[105] The licence for the rest of continental Europe was taken up by Michael Welte & Sohne of Freiburg im Brisgau, the builder of orchestrions.[106] As always, licensing was an easy way to earn a living with little direct responsibility for unsuccessful results. The Americans must surely have earned at least five and perhaps even ten per cent of Merklin's contract value, but did Schmoele & Mols also profit by the manufacture and supply of the electrical equipment? We do know that the firm set up a joint venture called Schmoele, Rhodes & Co. in London before 1888, but there is no evidence of any work in this country, *vide* p.79.

Hope-Jones was especially successful in licensing his technology during the 1890s to several well-known organ-builders. 21 builders are known to have held licences, including August Gern, Hele & Son, William Hill & Son, Norman Brothers & Beard, and W. G. Vowles.[107] One estimate suggests that his annual licence income was nearly £110,000 in today's money during the period 1891-1901.[108] Not an excessive income by modern expectations.

---

104. Advertisement, *The Choir* (5 March 1870), p. 103

105. Guéritey, Pierre-Marie, 'Introduction à l'étude des transmissions électropneumatiques dans l'orgue au XIXe siècle', *L'orgue* 213 (Jan-Feb-Mars 1990), p.17

106. Fidom, Hans, *Diversity in Unity: Discussions on Organ Building in Germany between 1880 and 1918*, The Free University Amsterdam, PhD Thesis, 2002

107. Fox, David H., *Robert Hope-Jones* (Richmond, VA: Organ Historical Society, 1992), p. 14-5

108. Hemsley, J.D.C., *The Role of Patents in the Development of the Victorian Organ*, University of Reading, M.A. Dissertation, 2001 p. 3

Finally, a list of organs built in France and Britain by the nineteen patentees during the period 1855 to 1890 is given below.

Decade	Organ location	ActionType	Year
1850s			
Stein	(1) Paris Exhibition	direct electric	1855
	(sold to Cavaille-Coll)		
	(2) demonstration model	direct electric	1865
1860s			
Barker	(3) St-Laurent, Salon	electro-pneumatic	1866
(with Peschard)	(4) St-Augustin, Paris	electro-pneumatic	1968
	(5) St-Pierre de Montrouge	electro-pneumatic	1969
	(6)St-François de Xavier	electro-pneumatic	1969
	order taken but not executed		
	due to the Franco-German war		
Bryceson Brothers	(7) Theatre Royal, Drury Lane	electro-pneumatic	1868
	(8) St. Michael, Cornhill	electro-pneumatic	1868
	(9) Christ church, Old Kent Road	electro-pneumatic	1869
	originally erected for the Three Choirs		
	Festival, Gloucester, in September 1868		
	(10) St. Augustine, Highbury	electro-pneumatic	1869
1870s			
	(11) St. George, Tufnell Park Road	electro-pneumatic	1871
	(12) Rugby School Chapel	electro-pneumatic	1872
	(13) Minley Manor, Farnborough	electro-pneumatic	?
	(14) Holy Trinity, Dover	electro-pneumatic	1876
	(15) N.J.Holmes residence,	electro-pneumatic	1876
	Regent's Park (echo organ only)		
1880s			
Merklin	(16) Temple des Brotteaux, Lyon	electro-pneumatic	1884
Merklin	(17) Tain-l'hermitage, Ets de la Teppe	electro-pneumatic	1885
Merklin	(18) St-Nizier, Lyon	electro-pneumatic	1886
Henry Willis	(19) Canterbury Cathedral	electro-pneumatic	1886

1880s (cont.)

Merklin	(20) St-Bonaventure, Lyon	electro-pneumatic	1887
Merklin	(21) St-Louis, Saint-Étienne	electro-pneumatic	1887
Merklin	(22) parish church, Saint-Raphaël	electro-pneumatic	1887
Merklin	(23) Clermont-Ferrand Cathedral	electro-pneumatic	1887
Merklin	(24) parish church,Draguignan	electro-pneumatic	1887
Merklin	(25) house organ, Lyon	electro-pneumatic	1887
Merklin	(26) Trappist monastery, Aiguebelle	electro-pneumatic	1887
Merklin	(27) St-Barbe-le-Soleil, Saint-Étienne	electro-pneumatic	1887
Bryceson brothers	(28) St Peter, Parkstone	electro- pneumatic	1888
	from the Inventions Exhibition, 1885		
Merklin	(29) St-Vincent de Paul, Marseille	electro-pneumatic	1888
Merklin	(30) *Pensionnat des Frères,* Beauvais	electro-pneumatic	1888
Merklin	(31) St-Clotilde, Paris, *orgue de choeur*	electro-pneumatic	1888
Merklin	(32) St-Jacques-du-Haut-Pas, Paris	electro-pneumatic	1888
Merklin	(33) parish church, Saint-Jean-de-Bournay	EP	1889
Merklin	(34) St-Martin-d'Ainay, Lyon	electro-pneumatic	1889

1890 (for this year only)

Hope-Jones	(35) St John, Birkenhead	electro-pneumatic	1890
Merklin	(36) parish church, Vals-les-Bains	electro-pneumatic	1890

Additionally, there was the Weigle direct action instrument at Echterdingen (1873) and at least two organs by Roosevelt and another by Standbridge built in the United States during the mid-1870s. These were conventional tracker action organs with electrification of the distant echo divisions. The ranking of organ-builders by output during 1855-1890 is:

Builder	Number	Remarks
Merklin	18	Schmoele & Mols licence
Bryceson	10	Barker licence
Barker	3	business cut short by the Franco-German war
Stein	2	the only builder to use direct electric action
Willis	1	Only one identified in the nineteenth century
Hope-Jones	1	was responsible for many organs during 1890-1903

We should note that only six patentees out of nineteen were successful in putting their inventions to work.

3.4 Technical review

Whilst the patent specifications broadly describe the mechanical and pneumatic lever aspects of the inventions, with a few in substantial engineering detail, the electrical technology is characterised by the absence of meaningful definition. Yet it is in this area that critically observed operational difficulties were experienced throughout the last half of the century. It is true that electrical engineering was, in the 1850s and 60s, a new applied science and that an understanding of the fundamental laws (particularly that of Ohm) did not appear to be usual amongst the electric-action organ-builders. The first recognition in the literature is by Peschard, as late as 1896, in the little book that he wrote summarising his work of 35 years in the field.[109] That there were no reliable voltmeters or ammeters outside the laboratory during the pioneering years must have been a serious hindrance to the work of Stein, Peschard, Barker and others. Such instrumentation did not appear until the 1880s.

For us, the absence of any archaeological material from the 1860s and 1870s is disappointing. The Canterbury Cathedral electric action organ of 1886, the last example of the Barker-Bryceson concept of the 1870s, remained in operation, essentially as it was built, until 1939. Not even a Willis electromagnet is now to be found. The batteries had long disappeared, to be replaced by a maintenance-free mains supply in 1905. There are, though, Chapter accounts[110] for the cost of battery maintenance and water for the blowing engines. We know nothing about the size of the battery that Bryceson employed for his organs, the surface area of the zinc electrode, how long it lasted, how and when the electrolyte(s) was changed or topped–up, and who carried out the maintenance work. We have only Hinton's recollection of John Bryceson working in the roof space of the Stanhope Street workshop – the chamber of horrors - where the power and endurance of many kinds of battery were assessed.[111]

---

109. Peschard, Albert, *Êtudes sur l'orgue Êlectrique* (Paris: Imprimerie Larousse, 1896)

110. Extracted from the Canterbury Cathedral treasury books and treasury vouchers and collated by Joan Jeffery in a letter to me of 29 December 2002. References to be found in Section 3.5

111. Hinton, J. W., *Story of the Electric Organ* (London: Simkin, Marshall, Hamilton, Kent & Co., 1909), p. 50

3.4.1 Batteries

A cell of the Bunsen type appears to have been used in France for direct electric actions in the 1850s and 1860s. There are several qualitative descriptions of the Bunsen system in the literature, but little on typical dimensions or fluid concentrations. We know that the emf of the cell was 1.9 V and that up to 20 A could be drawn for a useful period of time, depending on whether strong or fuming grade nitric acid was employed within the porous pot, *vide* Appendix V. Bunsen batteries were still being used for electroplating in the late nineteenth century where the size of the shop did not justify the installation of a steam or gas driven dynamo.[112] We also read Captain's Nemo's account in *Vingt mille lieues sous les mers* about the Bunsen batteries used on the *Nautilus*; his crew must have had leather lined lungs.[113]

Barker's British patent indicates, without ambiguity, the use of the single fluid Bunsen cell, more commonly known as the bichromate cell. This cell suffered from hydrogen polarisation, so continuous use for only 30 minutes at its maximum current output was a constraint. Whatever battery was employed though, there were other obstacles to be dealt with by builders, church organists, or those responsible for the routine maintenance of electric instruments.

Batteries for the Peschard-Barker system were large and not easy to transport except in their constituent parts. Glass or earthenware jars had a diameter of at least 5 in (130 mm) whilst the Bryceson organ for the Regent's Park residence of N. J. Holmes had batteries the size of wash-house boilers for the echo division, *vide* p. 270. That anecdotal description by the Scottish builder, Lawton, does suggest a diameter of 20-24 in (500-600 mm). Even the smallest cell weighed 4½ –6 ½ lb (2-3kg) with its electrolyte and electrodes. The 'wash boilers' must have weighed at least 3 cwt (150 kg). Another obstacle was the need to replace the zinc electrode and change the

---

112. Wigley, Thomas B., *The art of the Goldsmith and Jeweller* (London: Charles griffin and Co., 1898), p. 201; Watt, Alexander, *Electro-deposition* (London: Crosby, Lockwood and Son, 1899), p. 17

113. Verne, Jules, *Vingt mille lieues sous les mers*, transl. Walter Miller and Frederick Paul Walter (Annapolis: Naval Institute Press, 1993), p. 61

electrolyte when the level of dissolved reaction products was such that the cell's output was no longer sufficient. Other problems were the capillary creep of electrolyte up the electrodes and over the jar causing corrosion of the electrical contacts, fuming with consequent damage to surrounding organ parts and the health of the players, evaporation losses requiring regular topping-up and the inherent fragility of the jar and a reduced current output at low temperature, *vide* Figure 57.[114] The electrodes of the early cells needed to be removed when playing stopped in order to conserve their life, hence Barker's ingenious idea to mount the jars on the top of the wind reservoir with the electrodes attached to an overhead beam. There is no wonder that the power supply was seen as a real challenge to the growth of the electric organ. Later on the much lower power needed by the Schmoele & Mols and the Hope-Jones systems coupled with the widespread introduction of the Leclanché cell went a long way toward the resolution of these problems.

The industrial process for the electroplating of steel components with zinc based on an acidic electrolyte has similarities with the acid electrolyte of a single (or twin) fluid primary cell. In both cases, a zinc metal electrode is placed in an acidic zinc containing solution. In the plating process, the zinc metal is the anode (+) and the component being plated is the cathode (-). In a battery, the zinc metal is the cathode (-) and the carbon is the anode (+). As an attempt to quantify the performance of a primary cell where zinc is the sacrificial electrode, such as the Bunsen cell, I have made some calculations based on the following premises:

1. The dissolution rate of zinc is directly proportional to the current applied (for plating), or withdrawn (for a primary cell)
   The maximum current that can be applied to a given area of zinc anode in plating is the same as the maximum current that can be withdrawn from a primary cell having the same cathode area (subject to similar values of such properties as density, viscosity, temperature, fluid concentration and turbulence). Based on electroplating practice, I have assumed this value to be 2 A / dm^2
2. The maximum practical quantity of power that can be withdrawn from a primary cell is equivalent to the dissolution of 80% of the mass of the zinc cathode

---

114. Guvendik, G. and Gabe, D. R., 'Solution Conductivity in Electrodeposition Processes', *Trans. IMF* 4 (1999), pp.127-131

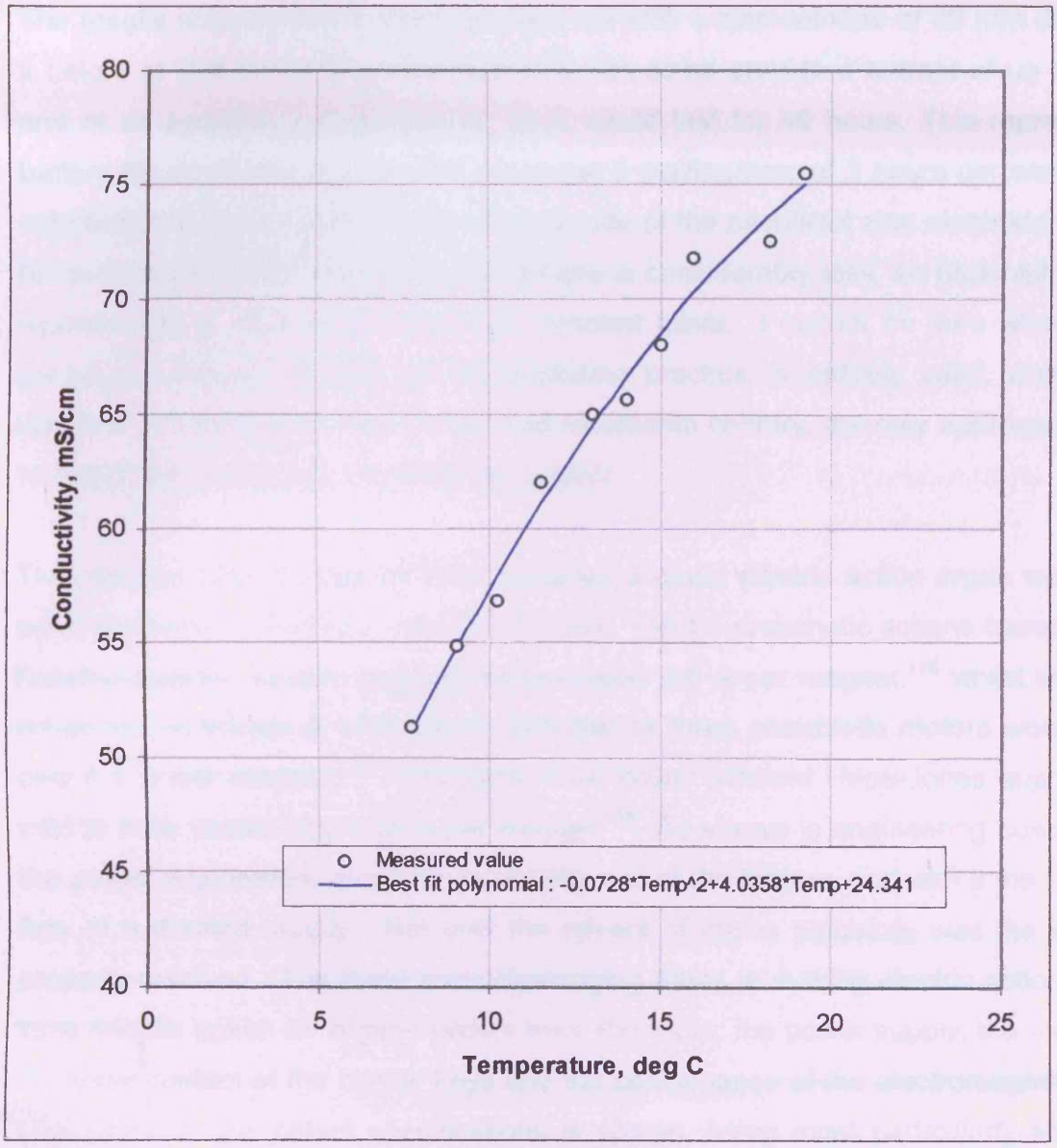

Figure 57 The specific conductivity of a potassium bichromate battery electrolyte as a function of temperature

(Walsh, F. C., experimental determination at the Department of Electrochemical Engineering, University of Southampton, 7 February 2005)

4. The efficiency of conversion of electrical energy into zinc deposition and its converse is 100%, so that the Electrochemical Equivalent of 1. 22 g / Ah holds.[115]

The results suggest that a single Bunsen cell with a zinc cathode of 80 mm diameter, a height of 200 mm and a thickness of 5 mm could provide a current of up to 16 A, and at an average current draw of 10 A, could last for 49 hours. This represents a battery life of around four months assuming a playing time of 3 hours per week. The calculation is solely related to the effective life of the sacrificial zinc electrode. It is to be understood that the life of the electrolyte is considerably less, so replenishment or replacement is necessary on a more frequent basis. I cannot be sure whether the calculation process based on electroplating practice is entirely valid, and in the absence of quantified data from the mid-nineteenth century, the only approach now is to implement a classical experimental project.

The average current draw of 10 A assumes a direct electric action organ where the pallet magnets (horseshoe) take 2-3 A each. Electro-pneumatic actions based on the Peschard-Barker system probably drew around 0.6 A per magnet,[116] whilst the more advanced Schmoele & Mols action with two or three pneumatic motors would draw only 0.1 A per magnet.[117] The even more power efficient Hope-Jones approach is said to have drawn only 0.05 A per magnet.[118] As always in engineering however, as the power requirement dropped, so did the size of the battery, and with it the constant fear of a drained supply. Not until the advent of mains electricity was the problem properly resolved. The three most challenging areas in making electric action a long term reliable option for organ-builders were therefore: the power supply, the making of electrical contact at the clavier keys and the performance of the electromagnets. The information in the patent specifications is sparse, being most particularly about the batteries and the magnets. My analysis of the patent data is listed in the following Tables.

---

115. *The Canning handbook* (Birmingham: W. Canning plc, 1982), p. 1054

116. Miller, Georges Laing, *Revolution récente dans la facture d'orgue* (Paris: *c.* 1915), p. 31

117. Peschard, Albert, *Études sur l'orgue électrique* (Paris: Imprimerie Larousse, 1896), p. 36

118. Pykett, Colin E., 'Hope-Jones and the Dry Cell', www.pykett.org.uk

Patentee	Battery	Single	No.	Wiring	Remarks
1850s					
Stein	twin fluid	single	-	-	probably Bunsen
Gauntlett	not specified	-	several	series	plunge type Volta
1860s					
Huot	-	-	-	-	no information
Martin	-	-	-	-	no information
Barker (Fr)	-	-	-	-	no information
Pechard (1862)	twin fluid	single	two	series	Pechard offers several combinations
Clair and Ferat	not specified	-	-	-	no information
Pechard (1863)	single fluid	single	-	-	copper-zinc (Callaud cell) for the lever assisted action
Goundry (GB 1863)	not specified	-	-	-	no information
Goundry (GB 1864)	not specified	-	-	-	no information
Barker (GB)	bichromate (deduced from the drawing)	-	two	series	retractable electrodes electrodes
Bryceson *et al.* (GB)	not specified	-	-	-	probably after Barker
Bryceson *et al.* (Fr)	not specified	-	-	-	probably after Barker
Roosevelt (US)	Smee	-	up to 6	series	one battery for each octave
Bryceson *et al.* (GB)	not specified	-	-	-	no information
1870s					
Benay (Fr)	Bunsen	-	single	-	one cell per clavier
Bishop (GB)	not specified	-	-	-	no information

1880s

Thibault (Fr)	not specified	-	-	-	no information
Schmoele *et al.* (Fr)	Leclanché	single	-	-	'or other suitable battery'
Schmoele *et al.* (GB)	Leclanché	single	-	-	as above
Willis, Vincent (GB)	not specified	-	-	-	no information
Willis, Henry (GB)	not specified	-	-	-	no information
Casson (GB)	not specified	-	-	-	no information

1890

Hope-Jones (GB)	Leclanché	-	2-3	series	dry cells

Other sources

Wangemann[119]	Lists Daniell, Bunsen, Meidinger and Grove, with Meidinger as the best for the Weigle organ of 1870. Weigle used one cell for every 10 notes.
Edwards[120]	Bichromate batteries for Bryceson organs.
Hope-Jones[121]	'We can now obtain all that we require from a single dry cell' but his organ at St John, Birkenhead had a connection cable of 120ft, so three cells in series were needed (4.5 V), with a claimed cell life of six months. Later information in a letter to *Musical Opinion* in 1899 says 'four full sized dry cells [say 6 V], which occupy a space of about 1 ft. square by 8 inches high, are sufficient to control an organ of twenty-two speaking stops and sixteen couplers, for from two to three months'.[122]
Lawton[123]	Bichromate cells for the organ built by Bryceson for N.J. Holmes in 1876: 'earthenware cells as big as wash-house boilers'.
Miller[124]	The Barker Salon (Bouches du Rhone) organ required a battery of 8 V with a current demand of 0.5-0.6 A [it is not clear whether the current demand is an average for the organ, or for one electromagnet; I suspect it is the latter].

119. Wangemann, Otto, *Orgel und der Orgelbaukunst* (Demmin: A. Frantz, 1881), Figure in Appendix
120. Edwards, C. A., *Organs and Organ Building* (London: 'The Bazaar Office', 1881), p. 87
121. Lawton, E. H., 'The Old Regent's Park Organ', *Musical Opinion* 711 (December 1936), p. 247
122. Hope-Jones, Robert, 'Electrical Aid to the Organist', College of Organists lecture (London: 5 May 1891), pp. 7 and 12
123. Soames, Werner H. K., Letter to *Musical Opinion* 266 (1 November 1899), p. 113
124. Miller, Georges Laing, *Révolution récente dans la facture d'orgue,* transl. G. Bédart (1915), p. 30.

Other sources (cont.)

Guéritey[125] Merklin used four *Laland et Chaperon piles* (1882) in series, providing a total of 3.5-3.6 V for the Schmoele & Mols patented action. Later on, Merklin changed to the lead-acid accumulator (2 V), or dry Leclanché cell (1.5 V). Guéritey gives the following data for the Laland and Chaperon cell:

electrolyte container	: circular glass jar
height of container	: 185 mm (4 7 in)
diameter of container	: 105 mm (4.1 in)
electrolyte	: potassium hydroxide solution (40-50%)

In summary, we can say that the direct action systems required the use of low resistance high output batteries such as the Bunsen and the bichromate cells. Wangemann's indication that the Daniell and the Meidinger cells could be used in the Weigle direct action organ is nonsensical; the resistance of these cells is far too high to provide the necessary current for heavy magnets. Peschard preferred the Callaud cell for his electro-pneumatic design of 1863, but again, it is doubtful whether it would have provided enough current for practical operation.

The Peschard-Barker and Bryceson organs almost certainly used the bichromate cell, whilst the lower power requirement of the Schmoele & Mols system was satisfied by the alkaline Laland and Chaperon cell. Hope-Jones and the other builders in the late nineteenth and early twentieth century used Leclanché cells until the advent of mains electricity.

125. Guéritey, Pierre-Marie, 'Introduction à l'étude des transmissions électropneumatique dans l'orgue au XIXe siècle', *L'orgue* 213 (Jan-Feb-Mar 1990), p. 12-3.

3.4.2 Clavier key contacts

The information on key contacts is altogether more helpful. Most inventors include design data on their preferred methods. Peschard, in particular, stresses the importance to the player of repeatability in the depth of touch and speed of return. there were four types of contact described: the simple point contact, the spring contact, the brushing contact and the mercury pot contact. Various materials were used. These included highly conductive metals such as copper, phosphor bronze,[126] silver, and platinum, in various combinations. Atmospheric oxidation of copper could not be eliminated, imposing a resistance at the contact that was significant in relation to the inherent resistance in the wiring between the console and the soundboard. Silver also oxidises in the atmosphere but the oxide film is highly conductive so we find the use of silver in common practice to this day. Silver wire may be sterling or with ten per cent tin to make the wire more springy. The early builders of direct electric action were certainly aware of the sparking propensity in the making and breaking of contacts that carry currents of the order of more than a few tenths of an ampere, although they may not have been aware of the very high back emf when the contact was broken. Vincent Willis was probably the first builder to recognise this phenomenon and design-in a partially effective measure in his 1885 patent which included the use of laminated iron cores and, for the Canterbury Cathedral organ, a condenser across each key contact. The electro-pneumatic systems of Schmoele & Mols and Hope-Jones employed very small horseshoe magnets with a resistance of the order of 45 ohms so the current draw was of the order of milliamperes.[127] These systems suffered much less from sparking and oxidation effects, so that problems with the action (unless due to battery failure) were more likely to have been due to dirty disc valves and sluggish pneumatic motor trains.

A summary of contact data given in the patents is listed below:

---

126. An alloy of copper, tin and phosphorus that was well known in the mid-nineteenth century. The phosphorus imparted a spring quality to the alloy.

127. Lewis used magnets of up to 250 ohms resistance.

Patentee	Contact type	Remarks
1850s		
Stein	a pair of copper discs, 20 mm in dia.	oxidation problems
Gauntlet	pointed pin onto metal strip	coupling required 4 independent pins to strike 4 separate contact strips at the same time
1860s		
Huot	a pair of copper discs	
Martin	no information	
Barker (Fr)	mercury pot	splashing and vaporisation
Pechard (1862)	mercury pot	
Clair and Ferat	copper discs	
Pechard (1863)	mercury pot	
Goundry (GB 1863)	mercury pot or springs	
Goundry (GB 1864)	no further information	
Barker (GB)	mercury pot	
Bryceson *et al.* (GB)	no information	mercury pots after Barker
Bryceson (Fr)	no information	same patent text as above
Roosevelt (US)	mercury pot	
Bryceson *et al.* (GB)	not applicable	stop slider control only
1870s		
Benay (Fr)	copper discs or fixed contact and spring strip	
Bishop (GB)	key spring onto metal plate	does not specify mercury pots
1880s		
Thibault (Fr)	no information	
Schmoele & Mols (Fr)	coil spring on to contact strip	uneven action due to varying spring length with time
Willis, Vincent (GB)	platinum pin and plate also mercury pot	special design, *vide* text
Willis, Henry (GB)	no information	
Debierre (Fr)	key spring on to metal plate	
Casson (GB)	no information	

1890

Hope-Jones (GB)	spring wire under the clavier key Pressed between pins so placed As to ensure a rubbing contact	first design of a true rubbing contact to maintain cleanliness

The clavier key contact data is summarised below:

Contact type	Applications	Remarks
twin copper disc conductors	4	only Stein has experience
key pin onto copper conductor	2	prone to burn, poor conductivity
key coil spring strip or wire onto copper conductor	1	uneven touch
key spring strip or wire onto copper conductor	2	adds to key pressure
mercury pot	7	no additional key pressure
horizontal key spring wire pressed between vertical pin conductors (Hope-Jones)	1	good rubbing contact for cleanliness

The most popular key contact amongst the patentees is the mercury (quicksilver) pot. Its advantages are noiseless operation, no additional load on the key pressure and even key depression. Its disadvantages are splashing and ciphering of adjacent notes, loss of mercury through vaporisation, access for topping-up and potential health hazard. Altogether an expensive electrical contact in first cost and maintenance.

Very large mercury pot contacts were used well into the 1960s for the switching of automated welding equipment in the automotive industry.[128]

128. Crowley, P.J., private communication, 4 June 2004

3.4.3 Electromagnets

Gauntlett used single coil magnets for pulling down the pallets in his description of a finger organ, but horseshoe (double coil) magnets for his barrel organ. The WCMT results (Appendix IX) show the dramatic increase in magnetic power that can be achieved from the horseshoe format with lower power input: a phenomenon described by Sturgeon a quarter of a century before, but seemingly unknown to Gauntlett. Goundry's invention uses only single coil magnets, so he too, was starting from a challenging and difficult base line. Other single coil inventors were the Frenchmen Huot and Martin. Not surprisingly, there is no evidence to suggest that any of these inventors built a working pipe-organ. Although the Stein patent described single and double coil magnets, I believe that he used a double coil version for the 1855 Paris *Exposition* model, since the WCMT data[129] indicate that the functioning of the single coil magnet was only possible with a high current, albeit with the small scale and low wind pressure of the instrument. Without exception, the other known builders of electric organs (Barker, Bryceson, Merklin, Hope-Jones, Willis and Weigle) used double coil magnets. The *Exposition* organ worked, but with serious key contact difficulties, due to the high direct action current.

Apart from the high current needed for the direct action magnets, the transient back-emf resulting from the decay of energy stored in large magnet cores was said to slow the release of the armature and thus the coupled pallet, an effect that was believed to have a negative impact on the player's touch. The decay in magnetic force is very fast – the order of a few milliseconds and delay experienced by the performer was probably due, at least in part, to the inertia of correspondingly heavy armatures. A heavy armature would also be responsible, of course, for slowing the pallet response on depressing the clavier key. Another potential problem with large magnets was the heat released by the coil during playing. Although an energy release of 3-6 watts does

---

129. Work carried out by the Wolfson Centre for Magnetics Technology, Cardiff University, for me and summarized in Appendix IV.

not seem significant, such a release confined in an insulated (thermally as well as electrically) magnet coil will cause a noticeable temperature increase, with perhaps a damaging effect on the coil wire insulation, and it will do this after only a few minutes.

Steel and iron retain a level of permanent magnetism after being subject to an external magnetic influence (even the weak earth's magnetic field is effective). Iron retains the least residual magnetism, and Swedish iron, known to be a particularly pure form of iron, was a preferred material for electromagnets in the nineteenth century. Whilst the residual magnetism was unimportant for large direct action magnets where the release force (i.e. that of the pallet return spring) was of the order of 100 g, the mechanical return forces of the very small armatures associated with the electro-pneumatic systems of Schmoele & Mols, and particularly Hope-Jones, could be adversely affected by residual magnetism. It does this to the extent that a thin wafer of paper or a varnished film is interpolated between the magnet core and the armature to ensure a release after the current was switched off. Residual magnetism did not appear to be a problem with the larger magnets used in the Barker-Bryceson phase of electric action development.

The Willis action for the Canterbury Cathedral organ is discussed in the Theresa Willis Testament.[130] It seems that the action employed the laminated core magnet described by Henry Willis in his 1885 patent. This core technique would have reduced the control of sparking at the mercury pots. It also seems that Willis used condensers for the same purpose. Today, the diode is the preferred instrument of spark control.

An important claim of Hope-Jones related to the very small power that his action required. His statement that 'a single dry cell' was enough to maintain his action caused a flutter at a presentation to the College of Organists in 1891. Hope-Jones' dry cell was, without doubt, somewhat larger in current output and capacity than the dry cell we are used to today for our torches and portable wireless sets. Nevertheless the stretch of credibility noted then and even more so today is the subject of a critical study by Pykett.[131]

---

130 Bicknell, Stephen, 'The Testament of Theresa Willis', *JBIOS* 26 (Oxford: Positif Press, 2002), p.42

131. Pykett, Colin E., *Hope-Jones at the College of Organists* www.pykett.org.uk 2000

3.5 Capital and operating costs

The capital and operating costs of organs in the nineteenth century, as now, are not readily found today, and such information that is known is often less than meaningful because it cannot be related to the actual specification of the instrument. What we may be sure of is that competitive bidding for an organ generally resulted, then, as always, in the contract being given to the lowest cost builder, with operating cost being a secondary issue.

Whilst electric organ-action patentees frequently cited the poor reliability of mechanical and Barker lever-assisted actions as an incentive for their inventions, we have noted only one patent in which it is claimed that an electric action has a cost benefit. Apart from more reliable operation, the two other significant advantages claimed by the inventors were the ability to locate the console at will and the opportunity easy registration and clavier-coupling of larger organs. (Oliver Latry needed the services of a registrant at the opening of the restored Willis organ in Reading Town Hall during October 1999).

Henry Bryceson's sales promotion of his electro-pneumatic action in the late1860s and 1870s was clear. He offered his electric action only in cases where a mechanical action, with or without Barker lever assistance, was impracticable for a detached console. (We must remember that the tubular pneumatic action did not become a viable system until the 1880s in Europe, and then only in Germany and Britain). The implication of Bryceson's attitude is clear: the capital cost of an electric action at that time commanded a capital-cost penalty that was unsustainable for the traditional console position. Today, the cost situation is rather advantageous. Much is made by historians of the fact that the expanding electric telegraph networks, with their demand for a huge supply of electrical equipment, materially assisted electrical applications for the pipe-organ.[132] There must have more than an element of truth here, but the high-intensity electromagnets for telegraph indicators, recorders and repeaters were

---

132. Ramsbottom, C.E. and Ramsbottom, A. J., 'Development of the electric Organ and the Significance of the Contributions of Robert Hope-Jones', *IEE Proceedings* 6 (November 1989), p. 326

high- resistance units of low magnetic force and they consumed little power.

Organ magnets in Britain up to the late 1880s were, in Humphrey Davy's somewhat obscure terminology, 'quantity magnets' with a low resistance and a high power consumption. Such magnets were almost certainly not 'off the shelf', and the thick wire coils had to be made to order. (It is unlikely that Bryceson would have had coil winding equipment in his factory). By the 1880s in France and the 1890s in Britain, the advent of the low power Schmoele & Mols/Hope-Jones systems enabled organ-builders to take more advantage of equipment such as the high-resistance intensity magnets that were available for the telegraph and telephone industries.

The 1886 Willis organ design for Canterbury Cathedral, originally conceived as a tubular pneumatic instrument and accepted as such by the Cathedral chapter in 1883, was changed, just before the contract was let, to an electric action because of doubts about the long transmission distance for a pneumatic action.[133] Willis said that the additional cost of the electrical equipment would be to his account. Sir John Stainer, the consultant who proved the organ, made a plea to the Cathedral Chapter to recognize the pecuniary loss to Willis.[134] As we shall later see, the 1880s were a difficult time for manufacturing industry, and no doubt Willis was also experiencing a difficult trading period. He would have put his best price forward, but it stretches belief that he would have signed a contract knowing that he would have made a loss.

---

133. Chapter Archives, 'Report on the Canterbury Cathedral Organ' DC Fabric 8/25/1/1 (1883) pp. 1-4 'The movements would be all atmospheric... as for Durham Cathedral'.
Chapter Archives, DCC/CA 14, (March 1885). 'A letter was read from Mr Willis reporting on improvements in the electric action of organs whereby a case [in the Triforium] would not be necessary'.

134. Chapter Archives, DCC/CA 14 (23 August 1886) p. 30. A letter to the Dean and Chapter from Sir John Stainer, 'I should like to call the attention of the Dean and Chapter to the generous gift by Mr Willis of the costly electric action of the instrument; he drew up a specification on the basis of the changes from the ordinary mechanism, but being alive to the special difficulties of the proposed position of the organ, he made an enormous contribution to the Cathedral by installing a novel and perfect electric communication at the cost to himself equal to the whole value of the instrument'.

More likely, Willis was prepared to see his profit absorbed by the extra cost of the electrical equipment: an investment for gaining experience in what was a new technology for his company, and one which he anticipated would be ultimately important for the organ-building trade.

Apart from the operational concerns of the battery as a power supply for organ actions, there was said to be a considerable cost in the purchase of battery materials and the subsequent maintenance expenditure. How did the costs compare with those of today? Costs for potassium bichromate (dichromate is the standard name today) cost about 1s.per lb in the late 1870s, and sulphuric acid (98%) was 3d per lb.[135] A comparison with the cost of these chemicals today is given below, together with the cost of the made-up electrolyte. [136]

	Cost - s. / lb	Cost - £ / kg	Cost - £ / kg
Substance	1878	1878 (today's cost)	2004
Potassium bichromate	1	6.40	6.80
Sulphuric acid (98%)	3	0.43	0.20

Inflation factor for 1878 – 2004 is 58. 2004 data are for 25 kg lots.

The closeness of the pricing data is remarkable, considering the scale effect of production tonnages of these materials today. We can now be sure that the battery chemical costs in the 1870-80s where not a prohibitive factor.

	Quantity - kg	Cost–1878 (today's cost) £	2004 - £
Potassium bichromate	0.301	1.93	2.05
Sulphuric acid	0.267	0.43	0.20
Water	1		
	Total	2.36	2.25

Bichromate cell electrolyte make-up cost per 1 litre water

135. Urquhart, John W., *Electric light, its Production and Use* (London: Crosby, Lockwood & Co., 1880), p.16

136. Marshall, Percival, *Electric batteries, how made and used* (London: The Model Engineer, 1889), pp. 24,35

The electrolyte cost for a 5 litre cell was therefore around £12, so the cost for two cells in series would have been £24. Edwards[137] says that maintenance occurred 4-5 times per year so the annual cost was £50 – 60. To this must be added the cost of the sacrificial zinc electrode metal and occasional breakages of the carbon electrodes. Edwards was an acquaintance of the Brycesons and was probably being optimistic about the frequency of maintenance. Bryceson himself said (in his paper to the Society of Arts) that the annual cost of maintaining the 1867 Theatre Royal organ after its move to the Regent Street Polytechnic was 24s per year, say £115 in today's money.

We must also note the annual battery maintenance costs for Canterbury Cathedral in the late 1880s early 1890s. Willis was responsible for the work and did so for an annual fee of £26.10s. There were also costs for 'electricity' done by the local silent automatic sewing machine distributor, Willcox & Gibbs, also expert in electric bells and electrical work of all kinds. The Cathedral accounts are not easy to understand, but the organ related costs for a few years are:[138]

1886-87 (November 1887)	Willcox & Gibbs, electrical work	£ 17-13-9
1887-88 (July 1888)	Willcox & Gibbs, electricity	£ 17-13-9
1887-88 (March 1888)	Willis & Son, maintenance (1year)	£ 86 - 5-0
1888-89 (March 1889)	Willis & Son, maintenance (1year)	£ 86 - 5-0
1893-94	Willis & Son, maintenance (1year)	£98-11-8
1894-95	Willis & Son, maintenance (1 year)	£205-16-10
1895-96	Willis & Son, maintenance (1year)	£205-16-10
1889-90	Willis & Son, maintenance (1 year)	£176-1-6

It seems that Willis charged an annual flat fee of £86-5-0, of which £ 30-0-0 was for the electric key contacts, £26-5-0 for the batteries and £ 30-0-0 for tuning, plus extra for repairs as necessary. The annual £56 cost for the electrical maintenance is equivalent to around £3,500 in today's money. To put the costs into perspective, the

---

137. Edwards, C. A., *Organs and Organ Building* (London: "The Bazaar Office", 1881), p. 87

138. Canterbury Cathedral - Treasurer's Books and Treasurer's Vouchers for the period 1886-89

annual cost of water for the blowing machinery over the period 1888-1891 was also £3,500 in today's money. The battery maintenance cost (if we exclude the charges from Willcox & Gibbs for the first two years after installation) is about half that worked out from the chemicals costs. It is not clear at this stage why there is such a substantial discrepancy. Nevertheless, I conclude that battery operational costs were a significant but perhaps not overriding concern for the Victorian church vestry and that a common view of the punitive running cost of electric actions by such eminent builders of the time as Cavaillé-Coll and Sander,[139] and writers such as Rupp[140] was exaggerated, instead they argued that the air from the wind reservoir for the operation of high consumption pneumatic systems was free. Nothing is free, and energy has to be paid for in one way or another, whether it is in the harder work for the organ blower, the cost of water for an hydraulic blowing machine, or electricity for a centrifugal fan.

What really turned organists against electric action right up to the beginning of the twentieth century was not the cost but the hazardous work necessary in keeping the batteries in working condition in between the regular but infrequent visits of the builder or electrician and the effort in maintaining mercury key contact pots that would cease to function, like the batteries, without warning.

---

139. Douglass, Fenner, *Cavaillé-Coll and the French Romantic Tradition* (Yale: Yale UniversityPress,1999), p.146

140. Rupp, Emile, *Die Entwicklungsgeschichte der Orgelbaukunst* (Strasburg: Benziger & Co. A-G., 1929)

4. BRYCESON – THE LONDON ORGAN-BUILDER

Although Bryceson, the London based organ-building firm, spanned three centuries and made an important contribution to the technology of organ construction, there has never been a critical review or historic evaluation of the business, its work list, or the Bryceson family.

4.1 Corporate History

Bryceson's centenary publicity pamphlet for 1896 (*vide* Figure 58), indicates that the business was founded by Henry Bryceson senior in 1796, at the young age of twenty one years. The first Bryceson entry is found in Holden's Triennial Directory to 28 January 1800, 2nd edition, but that entry is for a William Bryceson, a Gold and Silversmith, and it gives the address of his workshop as 3 Little Thames Street St Catherine's, *vide* Figure 59. By 1802 though, William Bryceson has moved to 7 George Street, Adelphi, leaving the Little Thames Street premises to his younger brother Henry Bryceson, Organ-builder. This was, almost certainly, Henry's next business premises, and where he remained until 1809, at which time he moved westwards to 3 Great Windmill Street, Haymarket, an area which had long been the centre of theatre-land. His stay seems to have been short lived, though, as Kent's Directory for 1809 lists an address a little eastward again, at 22 Market Street, St James. The Post Office Directory continues to record Great Windmill Street as Bryceson's until 1810, but this is probably an out-of-date entry.

By 1816, Bryceson is once more on the move, this time to 38 Long Acre, a short step from Covent Garden, Drury Lane and Wych Street, from where James Hancock, the nephew of John Crang and the last of the Crang-Hancock dynasty of instrument–makers, was working as an organ-tuner and repairer. This time, the stay was much longer – six years before he moved to Tottenham Court, New Road, Pancras for what was to be the longest sojourn of the business. At Tottenham Court, Bryceson lived over the workshop, married, and remarried, and brought up five children by his second wife. Both his marriages, and his

Gold Medal 1885.

BRYCESON BROTHERS.

ORGANS,

Chamber or Concert Hall.

Established 100 Years.

1. The rapid modern development of Electric Installations and reliable Gas, Water or Electric Motors for blowing power, as well as the introduction of Tubular-pneumatic and Electric transmission, now admit of the successful distribution or separation of an organ into distinct blocks, so that valuable space in a chamber or hall is much economized, besides many other novel advantages gained.

2. A practical survey of any assigned position in order to fully utilize existing conditions, or suggest structural alterations for the better accommodation of an organ, is really the primary step to be taken before any precise list of "Stops" (often misnamed *a specification*) is attempted, which might otherwise lead to the crowding in of undesirable quantity, instead of a selection governed by available space. Therefore no general illustrated or price list can be made serviceable where there is such a range of circumstances and individual taste concerned in what should result in producing a successful work of art, possibly constructed for the one occasion only, and certainly never multiplied by numbers.

3. The first Electric Organ in England was built by Bryceson Brothers, for Her Majesty's Opera, and publicly inaugurated with the keyboards placed in the orchestra, May 15, 1868. This system was introduced through a concession from Mr. Barker, organ builder, Paris, but forthwith perfected and adapted to English requirements, in successive patents taken out by ourselves, and applied to many well-known organs since. Therefore, tested by years of ordinary usage (see Dr. Hopkins' comprehensive standard volume, "*The Organ*," or "Organs and Organ Building," by Mr. C. A. Edwards.)

4. The above "revolution in the construction of the Royal Instrument," alluded to in the *Musical World* of July 18th, 1868, quickly led us and others to experiment with Tubular-pneumatic transmission (also a foreign invention of the same period), which has now become most useful and reliable to supersede mechanical drawstops and pedal actions, but is no, desirable for the manuals, when applied *direct*, in an inexpensive form—compound-pneumatic or electric key action being best of all, unquestionably, for large organs especially.

5. In 1875, Mr. N. J. Holmes' great organ of 4 manuals, 65 sounding stops, and carillon of 61 bells, the largest and best known instrument ever built for a private residence, was erected. Afterwards it was removed to the Albert Palace, Battersea; on the closing of same purchased by Mr. John Burns, M.P., but the building having to be demolished, a re-sale took place, and this organ is now at St. Benedict's Monastery, Fort Augustus, N.B., awaiting the completion of the vast Abbey.

6. At the International Inventions Exhibition, 1885, BRYCESON BROTHERS were awarded the *GOLD MEDAL* for "Application and Development of Electric Action, as adapted to Organ Mechanism;" also various Prize Medals have been gained at intervals dating from the First Great Exhibition, 1851.

7. Organ Builders to Royal Italian Opera, Her Majesty's Opera, Lyceum Theatre, Royal Academy of Music, St. James's Hall; Paisley Public Hall, Scotland; St. Andrew's Hall, Norwich; Penzance Town Hall, Rugby Public Schools; U. P. Church, Morningside, Edinburgh; SS. Peter and Paul's Catholic Church, Cork; Pro-Cathedral, Kensington; St. Peter's, Parkstone, etc., etc.

Figure 58 Bryceson Brothers' centenary publicity literature (second page)
(source: Bryceson file, British organ Archive)

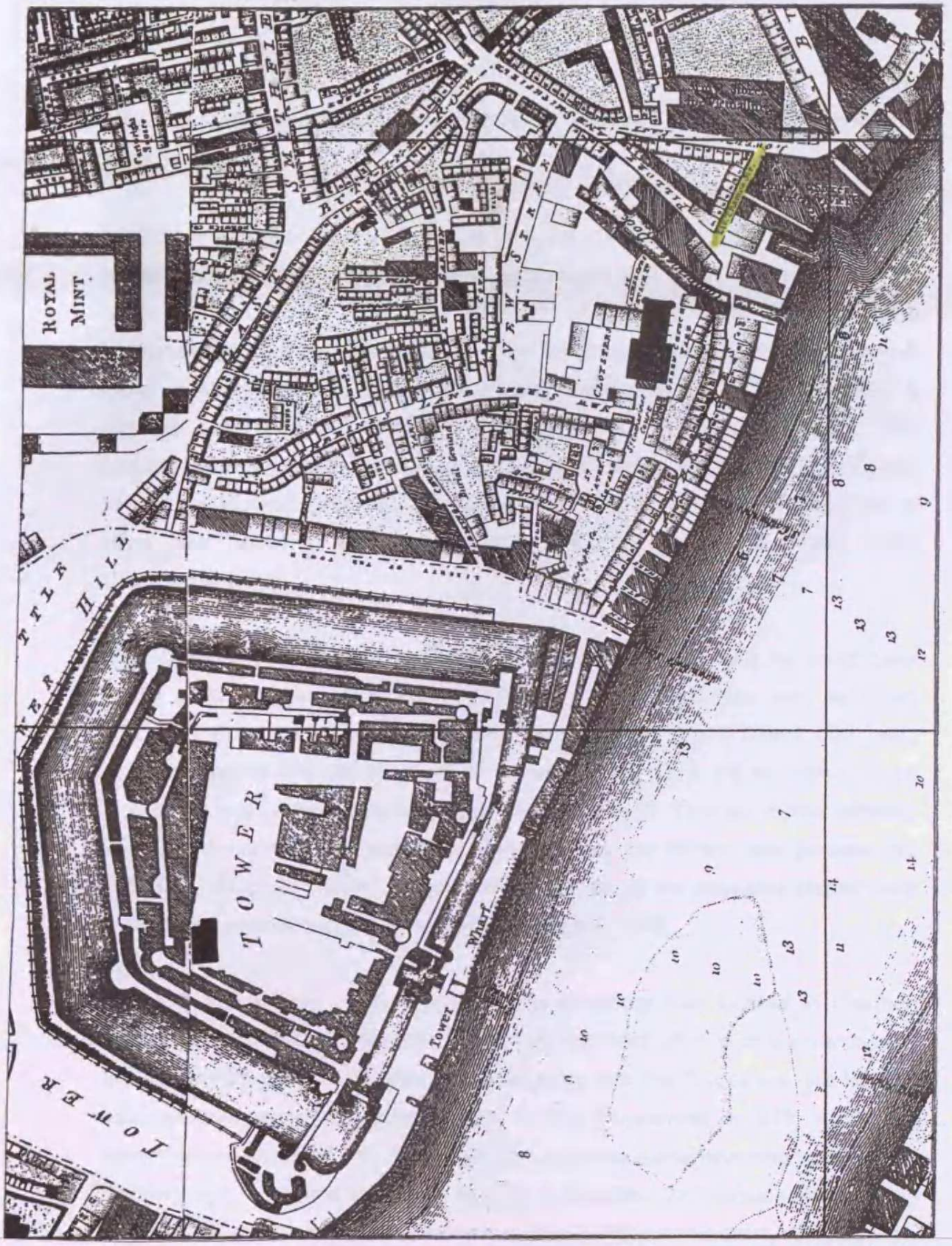

Figure 59 The first recorded address for Walter Bryceson, Goldsmith
(source: Kent's Trade Directory for 1800)

Little Thames Street is shown in the upper right hand corner of the map. Note its proximity to the Royal Mint. Henry Bryceson took over the premises, probably in 1800.

childrens' baptisms were solemnized at St. Pancras Old Church then with a much larger Parish.

In 1859, the business became known as Bryceson & Son, on the occasion of its move to Brook Street, just off the Euston Road, and when Henry Jnr was 27 years old. Later on in 1859, the contribution of the second son, John, was also recognised at his early age of 20 years, by a further name change to Bryceson & Sons. 1859-1860 also saw a short-lived relationship known as Bryceson & Fincham with one John Fincham, a pipe-maker of 110 Euston Road.[141] The London trade directories do not record this partnership, but there is a reference to it in the *Musical Times* towards the end of 1860.[142] Perhaps Fincham was a metal pipe supplier to Bryceson, rewarded with a partnership that did not, in the event, prosper.

By 1864, Henry Snr was approaching his ninetieth year, and he must have finally given up the reins of management, as the business was renamed Bryceson Brothers. In the meantime the name of Brook Street had been changed around 1867-68 to Stanhope Street. During 1873, the brothers took on a partner, one Alfred Morten, aged 24, the son of Thomas Honor Morten, variously a chemist and wine merchant. He was the Morten that became the patentee, along with Henry Jnr and John Bryceson, of the improved electric stop action and pneumatic pallet inventions of 1868 and 1869.

In 1881, and for ten years thereafter, the workshop was located in Charlton Place, Islington Green. The young Alfred Morten went off to start his own organ-building business in 1877, after only four years with the Brycesons, but he was replaced as a partner by Walter B. Ellis, another 24-year-old, in 1878. Again, the new partnership lasted only four years, the business name reverting to Bryceson Brothers and remaining so for the next three decades. In February 1888, Henry and John Bryceson sold the business to a group of seven investors, with Articles

---

141. NPOR – Data Base of British Organ Builders, (DBOB), Bryceson & Fincham

142. Advertisement in *The Musical Times* 212 (1860), p. 357

of Association being drawn up for a company limited by shares in the name of Bryceson Brothers Ltd.[143] The investors were:

William Thornton	Gentleman	5 shares
Charles Campion	Builder	5 shares
William James Wetenall	Licensed Victualler	5 shares
John S. Comrie	Civil Engineer	5 shares
Thomas Andrew	Builder	5 shares
Thomas Drew	Leather seller	34 shares
Samuel Richard Lamble	Builder	5 shares

Thomas Andrew was appointed Managing Director at an annual salary of £126 (say £6-7,000 in today's money). The Directors' fee for attending the monthly board meetings was £1. 1s. 0d. for each occasion. By the time of the first board meeting on June 1888, the disposition of the nominal share capital of £11,000 had changed somewhat with the majority shareholders being three gentlemen; William Thornton (3075 shares), Emanuel Levy (1250 shares) and Thomas Rowland Hill (206 shares). All was not well, though; by July 1891, the Directors felt it necessary to pass a Special Resolution that the company be wound up voluntarily.

What prompted the directors to put the business into liquidation after only three years of trading, or indeed what caused the brothers to sell their birthright in 1888, is open to speculation. It does seem, however, that there was a negative cash flow during the late eighties that stemmed from either poor financial management on the part of the brothers, too much cash being taken out by the brothers, or a demand for cash during the implementation of one or more large contracts. The action of the Directors in appointing an investor, the builder Thomas Andrew as Managing Director, demonstrates a lack of faith in the brothers' financial management capabilities. In the event, their cash injection of

143. Bundle of papers relating to Bryceson brothers Ltd, Pub. Rec. Office, ref: BT 31/4049/25853

£250,000 (in today's money) was of no avail. A report by the liquidator, dated February 1901, records that a meeting of the directors took place that month to have 'an account laid before them showing the manner in which the winding up of the Company has been conducted and the property of the Company disposed of'. During the lengthy winding up period (August 1891 – February 1901) the business appears to have been sold by the liquidator to the organ-builder Alfred Kirkland of Wakefield. The *DBOB*[144] gives a date of 1893 for the purchase, although Edmonds ascribes the date as about 1912.[145]

We must presume that the business was dormant from July 1891 until 1893 as there are no entries in the London directories for that period. The entries restart in 1893 with Bryceson Brothers' address given as 54 Essex Road. Thereafter there were moves in rapid succession to Church Street, Islington Green (1896-1905), Gillespie Road, Highbury (1906-1909), and finally to 155A Marlborough Road, Upper Holloway (1910). In all this period, Kirkland maintained the business name as Bryceson Brothers, at least until the death of Henry in 1909, the younger brother, John, having died in 1908.

Alfred Kirkland closed his business in 1923, and died a few years later in 1927. We are not yet sure when the old Bryceson part of the business finally closed, but there is a reference[146] to its continuance under the Bryceson Brothers' name, some two years after the death of Henry, until 1911. The NPOR[147] also suggests that the Kirkland business in London was known as Alfred Kirkland & Bryceson Brothers until 1917. It is likely though that the business had become fully assimilated into Kirkland prior to the 1914-1918 War.

There is another aspect to the financial woes of Brycesons in the 1880s worth consideration. The world's economic history during the second half of the

---

144. *The directory of British Organ Builders* (London: BIOS 2002)

145. Edmonds, B. B., *Musical Opinion* 1070 (November 1966), p.113

146. Daken, R.E., www.geocities.com/redrken/isichron9.html

147. The National Pipe Organ Register, managed by The British Institute of Organ Studies www.bios.org.uk

nineteenth century may be divided into three phases: the earlier Victorian phase of 1850-1873, a second phase of 1873-1896, frequently known as 'The Great Depression', and a final Edwardian phase of 1896-1910. Whilst some historians are willing to debate whether 'The Great Depression' was myth or reality, industrial production did slow after 1870, along with substantial price deflation, reduced profits and low capital investment. The following data are relevant.[148]

	1850-1873	**1873-1896**	**1896-1910**
Unemployment	4.6 %	5.8 %	4.0 %
Inflation	0.1 %	-1.5 %	0.1 %
Average annual productivity	1.12 %	0.99 %	0.80 %
	1870-4	**1885-9**	**1895-9**
Domestic exports	£235m	£226	£240m

We must also remember that some other London organ-builders had financial difficulties in the 1880s. Bishop and Son, a long standing builder of repute, was in serious trouble[149] towards the end of the decade, but was ultimately saved by the organ-builder and shareholder E. H. Suggate, and was able to operate well into the twentieth century. T. C. Lewis was for a time in dire straits and needed at least one cash injection from the family. Not least, Gray & Davison's annual output of new instruments must have been cause for concern for the directors; even Frederick Rothwell, G & D's chief voicer was deeply troubled.[150] But in any case, sales of 30 organs in 1878, 3 in1885, and not one instrument in Britain or overseas during 1886, was an appalling track record, and one not entirely explained by the depressive times.[151]

---

148. Munro, John H., *The great depression-myth or reality?* No.9 [17], www.munro@autoronto.ca

149. Elvin, Laurence, *Bishop and Son Organ Builders* (Lincoln: Elvin,1888), pp. 86-93

150. Keeble, Stephen, *The progress of Frederick Rothwell* (Harrow: Dragon Slayer Press, 2002), p. 2

151. Thistlethwaite, Nicholas, *Frederick Rothwell-Organ Builder*, unpublished paper at the BIOS /IBO Conference, London, 26 April 2000

That the economic climate of the times affected Bryceson Brothers is evidenced by the decision of the company to diversify into other product lines. By 1884, it was advertising itself as 'Timber Merchants, Sawing, Planing & Moulding Mill Proprietors' and more specifically as 'Builders, Cabinet Makers and General Turners', and for good measure 'General Wood-Workers by Steam Machinery', *vide* Figure 60.[152] The firm's standard products included stair balusters, stair newels, caps, table legs, sashes and frames, and American pine doors. In principle, such diversification was eminently sensible, for it capitalised on the in-house skills gathered through organ-building. Just as importantly, it made use of the existing machinery for working with wood. The firm no longer relied on manual sawing, planning, boring and turning. It had steam power and was thus well set-up with equipment for the 'mass production' necessary for the manufacture of joinery parts used in the fitting out of new buildings. That the quality would have been satisfactory, we may have no doubt. Whether the pricing and marketing of these products was competitive with existing manufacturers of long standing is questionable. Perhaps this was the diversification that interested the three builders amongst the investors in 1888.

Another diversification, not so close to the firm's core business was the manufacture of portable buildings using galvanised corrugated iron, the patent of one Edward Allen, C.E., *vide* figure 61.[153] No date has been ascertained for the start (or finish) of this venture, but the information shown in the Figure was obtained along with some papers relating to the sale of a Bryceson organ to Llanfachreth church in North Wales in 1886.[154] It seems that at that time Byceson Brothers attended some exhibitions with this product.

A final note: the telephone number for the Bryceson Brothers factory at Charlton place, Islington was 6613. It is unlikely that many other London organ-builders had steam power and a telephone (patented in 1876 by A. G. Bell) in the1880s.

---

152. Quite what Allen contributed to corrugated galvanised iron is not uncertain. We do know that the material was well established for roofing by the late 1830s, and reached its peak production in the 1880s.
153. Gwynedd Council archive, Z/DBM/98
154. Gwynedd Council Archive, Z/DBM/101

BRYCESON BROS., CHARLTON MILLS,

CHARLTON PLACE, ISLINGTON, N.

TELEPHONE 6613.

Timber Merchants, Sawing, Planing & Moulding Mill Proprietors

BUILDERS', CABINET MAKERS' AND GENERAL TURNERS. GENERAL WOOD-WORKERS BY STEAM MACHINERY.

STAIR BALUSTERS.

PRICES.

YELLOW DEAL.

Nos. 1, 2, 3, 4.

2 ft. by 1¼ in.	1/6 per doz.
2 „ „ 1½ „	1/10 „
2 „ „ 2 „	2/9 „

Nos. 5 and 6.

2 „ „ 1½ in.	2/9 „
2 „ „ 2 „	3/6 „

PITCH PINE.

Nos. 7 and 8.

2 ft. by 1¼ in.	4/0 per doz.
2 „ „ 2 „	6/6 „ „

No. 9.

2 „ „ 1½ „	5/0 „
2 „ „ 2 „	7/6 „

No. 9a.

2 „ „ 1½ „	6/0 „
2 „ „ 2 „	8/6 „

DROP BALUSTERS up to 3 feet 6 inches long to any of the above patterns, 1¼ inch, 24/- per Gross, and 1½ inch, 28/- per Gross. Planed up true to size and square, 2/6 per Gross extra.

THE PATTERNS SHOWN OPPOSITE KEPT IN STOCK.

TURNING DONE TO ANY PATTERN.

SPECIAL PRICES ON APPLICATION.

PATTERNS.

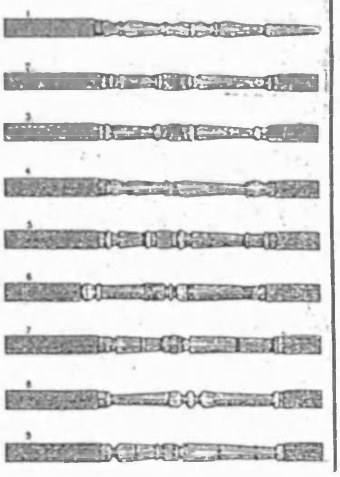

STAIR NEWELS.

PRICES.

YELLOW DEAL.

10. 11.	4 ft. 6 in. by 3×3 in.	1/0
12.	4 ft. 6 in. by 3×3 in.	1/4
	4 ft. 6 in. „ 4×4 in.	2/3
13.	3 ft. 6 in. by 3×3 in., with 2 squares	1/8
	3 ft. 6 in. „ 4×4 in., „ „	2/6

PITCH PINE.

14.	4 ft. 6 in. by 4×4 in.	3/0
15.	4 ft. 6 in. „ 4×4 in.	3/0

MAHOGANY.

16.	4 ft. 6 in. by 4×4 in.	4/6
17.	4 ft. 6 in. „ 4×4 in.	4/6

Planed up true to size and square, 2d. each extra.

The patterns shown opposite are kept in Stock; longer lengths at proportionate prices; any other pattern or size turned. Prices on application.

PATTERNS.

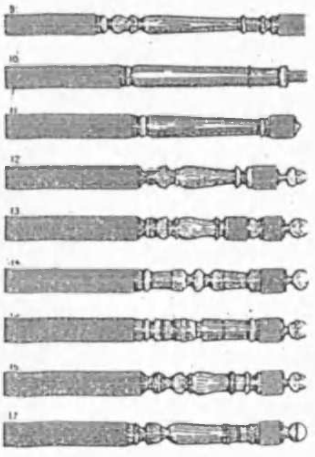

Special Quotations for Oak, Walnut, or other Hard Woods.

CAPS.

DEAL.

4 in. diameter ...	3d. each.
5 „ „ ...	4d. „

MAHOGANY.

4 in. diameter ...	4d. each.
5 „ „ ...	6d. „



Pitch Pine ... 33/ per 100 ft. run.
Mahogany ... 55/ „ „

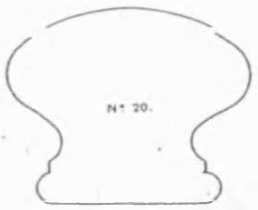

Yellow Deal ... 19/6 per 100 ft. run.
Mahogany ... 75/- „ „



Pitch Pine ... 32/6 per 100 ft. run.
Mahogany ... 60/ „ „
Oak ... 60/ „ „

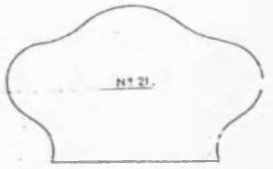

Yellow Deal ... 17/6 per 100 ft. run.
Pitch Pine ... 25/- „ „
Mahogany ... 60/- „ „

TABLE LEGS.

Per set of 4.

YELLOW DEAL.

Nos. 22 to 25.

2 in.	2½ in.	3 in.	4 in.
5d.	1s.	1s. 4d.	2s. 10d.

Nos. 26 and 27.

2 in.	2½ in.	3 in.	4 in.
1s.	1s. 6d.	2s. 4d.	3s. 6d.

Any other pattern or size turned. Prices on application. Yellow Deal kept in stock. Mahogany, Walnut Ash, and other hard woods turned to order.

PATTERNS.

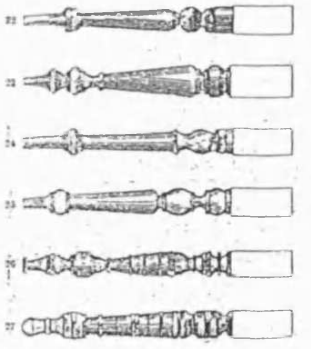

SWEDISH PLANED EXTENDED TRELLIS.

Size of Laths ¼ by 1 in.

No.	Centres.	Open.	Price per Square, to Lay Flat.
3	2½ by 3	12 by 2	7½
4	2½ „ 3½	12 „ 2½	8½
5	2½ „ 4	12 „ 3	10
7	2½ „ 5½	12 „ 4	13½
9	2½ „ 6½	12 „ 5	16½
11	2½ „ 8	12 „ 6	20



Price 7d. per foot, super, when closed.

FOR

SWEDISH YELLOW DOORS,

Yellow Deal Mouldings,

AND

AMERICAN PINE DOORS

SEE SEPARATE LISTS.

SASHES AND FRAMES

Made to order at short notice. Ordinary Sashes put together with Deal Sills and Iron Pulleys

1¼ inch, 8½d. per foot super.
1½ „ 10d. „ „ „

If with Oak Sills and Brass Pulleys add 1d. per foot super.

DISCOUNT FOR PROMPT CASH ON OR BEFORE DELIVERY, 5 PER CENT. IF BOOKED, NETT.

Log and Flitch Sawing, Deal Sawing, Bench and Ground-off Sawing, Band Sawing, Planing up to 24in. wide. Mouldings to Architects' Designs.

All kinds of Joinery work made without delay. Estimates sent per return of post.

BRYCESON BROS., ESTABLISHED 1796. 1884

Figure 60 Advertisement for Bryceson Brothers, Timber Merchants
(source: Archifau Gwynedd, Z/DBM/98)

IMPROVED

PORTABLE BUILDINGS

OF

GALVANISED CORRUGATED IRON OR WOOD,

Including

COTTAGES, FARM BUILDINGS, STABLES & COACH HOUSES, CHURCHES, CHAPELS, SCHOOLS, LECTURE, CLUB, AND MISSION HOUSES, BILLIARD AND SMOKING ROOMS, FISHING AND SHOOTING BOXES, BOAT AND SUMMER HOUSES, GARDEN HOUSES AND CONSERVATORIES, SPORTING AND CRICKET PAVILIONS, LABOURERS' DWELLINGS, PARK LODGES, FORESTERS' HOUSES, PARSONAGES, GOODS SHEDS, WAREHOUSES, WORKSHOPS, OFFICES, MARKETS, DRILL AND MUSIC HALLS, ETC. ETC.

EDWARD E. ALLEN, C.E., Patentee,

Stand No. 345 Forestry Exhibition;

AND

343 South Central Gallery, and 1071 in Grounds, International Health Exhibition.

SOLE CONTRACTORS—

BRYCESON BROTHERS, Charlton Works, Charlton Place, Islington Green,

Telephone 6613. LONDON, N.

NOTE.—*Designs and Estimates for any of the above supplied free of Charge upon full requirements being stated.*

Edinburgh: T. & A. Constable, Printers to Her Majesty.

Figure 61 Advertisement for Byrceson Brothers, Portable buildings contractor (source: Archifau Gwynedd, Z/DBM/98)

4.1.1 Contemporary Accounts

Organographia, [155] a manuscript collection of organ specifications compiled in the beginning of the nineteenth century, and possibly based, in part at least, on an earlier compilation by Henry Leffler, is too early to leave any record of Bryceson material. The *Notes* of Sperling, collated around the mid-1850s does include seven instruments dated from 1829 to 1854.[156] It is surprising, though, that the 1865 edition of *Hamilton's Catechism of the Organ,* published at a time when Bryceson had been in business for almost seventy years, makes no reference to the firm's work.[157] It is less surprising that the first edition of Grove (1879)[158] does not recognise Bryceson; after all, there must have been at least two dozen builders working in London at the time, and we have to wait until 1877 for the first substantial reference to Bryceson, in the third edition of Hopkins and Rimbault's *The Organ, Its History and Construction,*[159] where the authors were able to make a useful and topical contribution about Bryceson's introduction of the electric action during the late 1860s.

Shortly thereafter, C. A. Edward's work, *Organs and Organ Building* was published.[160] The preface records that 'Messrs. Bryceson Brothers kindly revised the opening chapters on organ construction'. It is likely that Bryceson also had a hand in the extensive description of the electric action in this book's Chapter VIII. The author's indebtedness is demonstrated by an engraving adjacent to the book's title page of the Bryceson organ built for N. J. Holmes' residence in Regent's Park, London, *vide* figure 1. This house organ was a four-clavier instrument of 65 speaking stops, including two 32 ft pedal ranks, and a 61 note set of carrillon bells. Indeed an instrument worthy of editorial publicity!

---

155. Anon, *Organographia,* Royal College of Music Ms1161, *circa* 1825

156. Sperling, J. H., three notebooks loaned by The Royal College of Organists to the British Library, Loan Nos. 79.9/1, 2, & 3

157. *Hamilton's Catechism of the Organ,* 1865 edition reprint (Buren: Frits Knuf, 1992)

158. *Grove's Dictionary of Music and Musicians* (London: Macmillan, 1879)

159. Hopkins, Edward J. & Rimbault, Edward F., *The Organ, its History and Construction* (London: Cocks & Co., 3/1877)

160. Edwards, C. A., *Organs and Organ Building* (London: 'The Bazaar Office', 1881)

F. E. Robertson, in his 1897 treatise on organ construction,[161] also devotes a chapter to electric actions, but without mentioning Bryceson. After a cursory historical review, he describes at length Hope-Jones's technology developed and patented in the early 1890s. Abdy Williams[162] in his *The Story of the Organ* (1903) merely lists Bryceson as a London organ builder. Another savant of organ construction was J. W. Hinton. Whilst the 1900 first edition[163] of his *Organ Construction* referred to Bryceson as having added pedal stops, new bellows and many manual stops to the organ of Norwich Cathedral, the third edition of 1910 also includes a brief reference to Bryceson's having built the first electric organ in England.

Following the absence of Bryceson's name in Grove's first edition, the second edition of 1904 makes up for the omission by listing five substantial organs, including the Great Concert Hall at Brighton, the Pro-Cathedral, Kensington, and the Cathedral of St. Peter and St. Paul, Cork. Thereafter, the firm must have blotted its copy-book, as there is no further reference in Grove until the entry by Michael Sayer in the New Grove edition of 2000. Sayer's article was actually prepared for the first New Grove edition of 1980, but not published,[164] but in any event it added nothing of consequence to what had already been published elsewhere.

Audsley[165] devotes a chapter of his book to electricity in organ building, and he acknowledges that the "distinguished" organ builder Bryceson was the first to introduce the electric-action into this country. Hinton returns to the history of the electric-action with the *Story of the Electric organ,* published in 1909.[166] This

161. Robertson, F. E., *A Practical Treatise on Organ Building* (London: Sampson Low, Marston & Co., 1897)

162. Williams, Abdy, *The story of the Organ* (London: The Walter Scott Publishing Co. Ltd, 1903)

163. Hinton, J. W., *Organ Construction* (London: Weekes and Co, 1/1900 and 3/1910)

164. Sayer, Michael, Private communication, July 2000

165. Audsley, George Ashdown, *The Art of Organ Building*, 2 Vols (NY: Dodd, Mead, 1905), II, pp. 705-719

166. Hinton, J. W., *Story of the Electric Organ* (Simkin, Marshall, Hamilton, Kent, 1909)

work can be said to be the definitive contemporary account of the development of electric action technology, with a complete chapter on the Barker–Bryceson relationship, and for the first time credit is given to Albert Peschard for the invention of a working electro-pneumatic system. Hinton must have taken a dislike to Robert Hope-Jones, as there are but a few words on this engineer's important work.

4.1.2 Later Accounts

Reginald Whitworth in the first edition (1930) of his book on the electric organ[167] essentially repeats what was already said on Bryceson by Audsley and Hinton. He does however note that Bryceson made some improvements in the technology licensed from Barker, and which were the subject of British patents in 1868 and 1869.

The story now goes cold until the publication of Boston and Langwill's work[168] on barrel organs in 1967. For the first time, the contribution of Bryceson to the construction of the barrel organ is noted, together with a brief history of the firm's business. More recently, Thistlethwaite (1990)[169] and Bicknell (1996)[170] produced works on the English organ which noted Bryceson's pioneering work on electric actions, but without offering any new material. Bicknell did however include Bryceson, along with Gray & Davison, Bishop, Bevington and Holdich, as 'London builders of note', whilst Thistlethwaite recorded that Bryceson and T.C. Bates 'were prolific builders of barrel organs; both built finger organs as well, but their importance in the evolution of organ design during the period under consideration [1820-40] was minimal'.

---

167. Whitworth,Reginald, *The Electric Organ* (London: Musical Opinion Ltd., 1930)

168. Boston, Noel and Langwill, Lyndsay, G., *Church and Chamber Barrel Organs* (London:Lyndesay G. Langwill, 1967)

169. Thistlethwaite, Nicholas, *The Making of the Victorian Organ* (Cambridge: CUP, 1990)

170. Bicknell, Stephen, *The History of the English Organ* (Cambridge: CUP, 1996)

4.2 London organ-builders, 1800-1900

The Bryceson and Bevington firms were unique in being the only British organ-builders to have traded from four decades before the Victorian age until well into the twentieth century. Indeed Bevington remained in business until 1955, a span of 162 years. Brycesons traded for 121 years, a creditable record only surpassed by those of Bishop, Walker, Willis and a few others, but none of whom were in existence before the end of the eighteenth century, *vide* Appendix VIII.

Thus Bryceson and Bevington adapted and saw through the dynamic development in organ design, from an essentially eighteenth century concept typified by such builders as Avery, Buckingham, George Pike England and Hugh Russell, and one which had changed little for almost 100 years, through the emergence of the C compass and the pedal division in the 1830s, the grand Victorian romantic organ of the 1870s, and finally, to the stultification of organ design in the early twentieth century. That Bryceson maintained a viable 'hands on' business over this period with only the two generations of father and son is surely remarkable.

The London trade directories for 1800-1910 list at least 140 organ-builders in the environs of the city. The directories will have gaps, and the actual number of firms at any one time is likely to be higher. Trade advertising in the directories did not become a significant source of revenue until well into the nineteenth century, and we may assume that trade entries commanded a fee. No doubt, some organ-builders were not willing to pay for an entry, and others were not aware of the directories themselves. In any event, however, it is not an especially significant issue for analytical purposes. The approximate number of organ-builders in each decade of the nineteenth century has been ascertained, and the bar-chart shewn in Figure 62 is of significant interest. The rapid development of the trade in the first half of the century may be accounted for by the parallel growth in the building of both established and non-conformist churches.

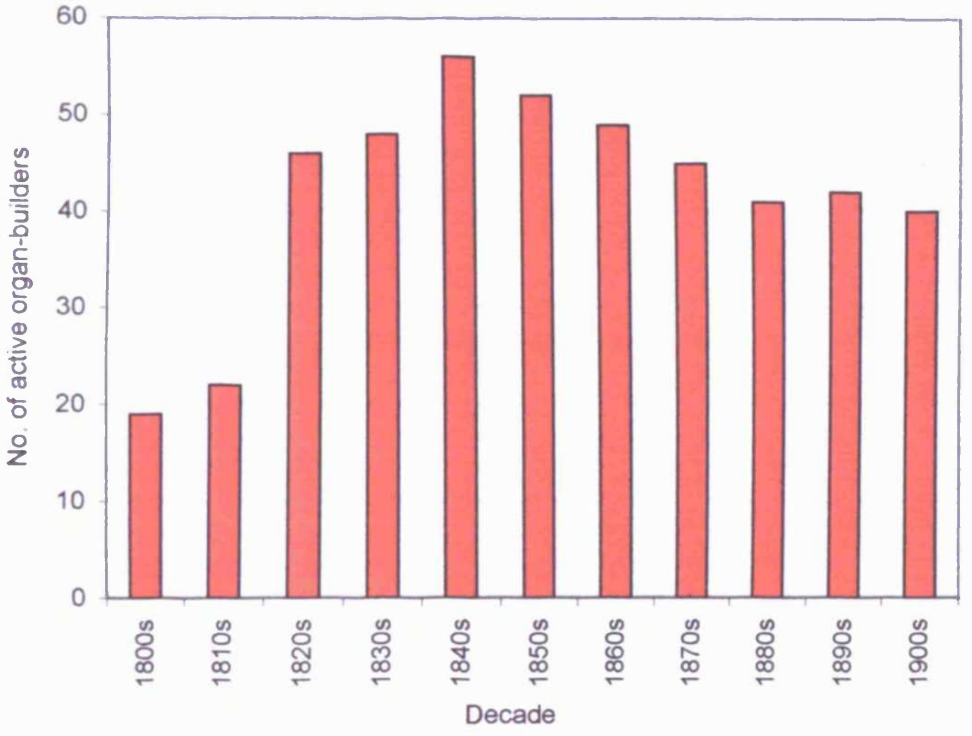

Figure 62 Active organ-builders in London during the nineteenth century
(compiled from the London Trade Directories)

The later decline in the organ trade population may be attributed to at least two factors: firstly, the growth in the size of a few firms, with the introduction of steam power for woodworking machines. As an example, the Bryceson brothers were using steam power by 1881, at which time the company employed 67 men and 7 boys.[171] The potential output of the firm must have been at least one significant instrument per month. Secondly, there was a point reached by the saturation of church building in the industrial areas of the country after the 1870s.

How did Bryceson stand in relation to the other London builders? We have already noted that the standard texts say little about his work. The 121 years of Bryceson's existence may be conveniently broken up into four periods:

1. The period ending with the Accession of Queen Victoria (1796-1837)
2. The introduction of the 'German system' (1837-1850), *vide* page 6
3. The emergence and flowering of the Victorian organ (1850-1880)
4. Industrial depression (1880-1905)
5. Final years (1905-1917)

First period

Henry Bryceson's first place of work in 1796 is unknown, but we know he was located in Little Thames Street in 1802. Already well established in diverse areas (*vide* Appendix VIII) were his London contemporaries John Avery, John Byfield, Benjamin Flight, William Gray (Robert Gray died in 1796), James Hancock (his brother John Crang Hancock was mainly a pianoforte maker operating in Bristol from 1800), John Pistor and Hugh Russell. We must also note the closing years of Samuel Green. New firms starting up in the century's last decade included Bevington, Buckingham, George Pike England, and Henry Cephas Lincoln.

Although Avery, Byfield, England, Russell and Green had experience in building

171. British census for 1881, www.familysearch.org

larger instruments, the other established builders were more comfortable with small house and barrel organs. Information on Bryceson's work in those early years is sparse, although the obituary of Henry Bryceson suggests that his father was the 'inventor of the barrel organ that led the music in many churches'. This statement is easily disproved as reference to Boston & Langwill and Wilson will confirm, with builders such as Flight active in this field several years before 1796. We must also recollect George Joyce and Peter East's patent of 1694 (No. 337) for which the Specification says 'automated organ or other keyboard instruments to play tunes, air, perform a consort' and Justinian Morse's barrel organ patent of 1731. It is reasonable to assume, however, that Bryceson's output was mainly barrel and house organs until the 1830s when we see the first evidence of single clavier instruments for church use. The really big maker of barrel and small finger organs was Theodore Charles Bates (*fl.*1812-1864), who is reputed to have built several hundred units.

By the 1820s, Elliot, Gray, Bevington and Bishop had established themselves as significant London organ builders within a rapidly growing industry that was soon to spawn the next generation of lead builders: Davison, William Hill and Joseph Walker.

During this first period, the NPOR lists 7 instruments by Henry Bryceson, the most notable and extant of which is the barrel organ (*c.*1810) in the Church of King Charles the Martyr, Shelland, in Suffolk (*vide* Appendix IX, Bryceson Provisional Opus List). There are also records of four instruments not listed in the NPOR, but included in the Provisional Opus List, amongst which is a barrel organ of c.1805.[172] Boston & Langwill mention another barrel organ, once the property of N. P. Mander, that is inscribed with the address: 22 Market Street, St James, London. This puts the year of build at somewhere between 1809 and 1816. The authors are incorrect in believing this address to be Brycesons' first place of business.[173]

---

172. Clutton, Cecil and Niland, Austin, *The British organ* (London: Batsford,1963), p. 215

173. Boston, Noel, and Langwill Lyndsay G., *Church and Chamber Barrel-Organ* (Edinburgh:The authors, 1967), p. 5

Second period (1837-1850)

Whilst the second period (1837-1850) saw a growing influence of the so called German system on British organ design, through Mendelssohn's visits to England (when he introduced the musical public to Bach's organ works) and Hill's association with the much travelled Gauntlett, most other builders continued along the traditional late eighteenth century lines. The Bryceson firm was still dominated by its founder. Even by 1850, the sons, Henry and John were only eighteen and eleven years old, whilst the father was approaching 75 years, so we may suppose that the Bryceson organs of the period were utterly traditional. My Provisional Opus List notes twelve organs during the period, all originally single manual instruments and only that at St. Andrew, Althorne having a pedal board (straight).

The other leading London organ builders: Bishop, Buckingham, Holdich, Robson and Russell also maintained a traditional output. Of the twenty organs designed by Gauntlett during 1838-49, fifteen were built by Hill, three by Lincoln, one by Flight and one by Bevington.[174]

My analysis of the NPOR for the second period clearly demonstrates the ranking of the London organ-builders in terms of output. Of the 56 builders listed in the London Trade Directories, only fifteen are listed in the NPOR with organs attributed to their work. The most prolific organ-builder is Gray & Davison (including the earlier work of Robert Gray) with 110 instruments. Walker has 90 instruments listed, and Hill is not far behind with 87 instruments. A list of the builders with the their outputs is given below: [175]

---

174. Thistlethwaite, Nicholas, *The Making of the Victorian Organ* (Cambridge: CUP, 1990), p.189

175. The National pipe organ register (NPOR) is frequently vague on whether an organ is a new instrument or a substantial rebuild. For the purpose of this analysis, and since the data are used for comparative purposes, we make no distinction between the first organ listed in the NPOR and subsequent entries which may are may not be new instrument.

No.	Name	Output
1	Gray, Gray & Davison	110
2	Walker	90
3	Hill	87
4	Holdich	65
5	Bishop	55
6	Bevington	31
7	Bates	23
8	**Bryceson**	**12**
9	Flight, Flight & Robson	8
10	Lincoln	7
11	Eagles	5
12	Pilcher	5
13	Buckingham	4
14	Buckwell	1
15	Bunting	1
	TOTAL	504

These data do not reflect the totality of each builder's output, as the history of many organs remains unrecognised by the National Pipe Organ Register (NPOR). We may consider that the above total can be multiplied by a factor of at least two. The data do however represent a realistic ranking and proportion of the total. We can see that Bryceson, during this period, was very much a small player, with under 2.5 % of the market. Perhaps the surprising feature of the ranking is the position of Holdich at fourth place.

Third period (1850-1880)

1850-80 saw the flowering of the Victorian organ, and the emergence of Henry Willis as an important builder of the highest quality. Overall output dramatically

grew during the period to over 2,300 recorded instruments, an increase of approaching five times that produced in the second, albeit shorter, period. The rankng of London builders with more than ten recorded instruments is tabled below:

No.	Name	Output
1	Walker	518
2	Hill	461
3	Gray & Davison	313
4	Willis	296
5	Bevington	234
6	Henry Jones & Sons	181
7	Holdich	180
8	Bishop	111
9	**Bryceson**	**103**
10	Hunter	49
11	Gern	19
12	Hedgeland	19
13	Flight, Robson	13
14	Fincham	12
	TOTAL	2,509

Willis, Henry Jones & Sons and Bevington have moved into the top five, whilst Holdich and Bishop, still with a substantial *oeuvre,* dropped down to seventh and eighth places. The Bryceson firm were in ninth place (eighth in the second period), but managed to increase its market share to 4.5%, a creditable performance by modern marketing standards. The retirement of the founding father in 1864 or thereabouts, and the influence of the two much younger sons must have been a significant factor. Their pioneering work in the development of electricity for organ actions, culminating in the building of no less than ten such instruments, plus their other inventions, and with the construction of several large

conventional instruments:

III P 38 for N. J. Holmes 1865
III P 38 for St. John's Hall, Penzance, 1867
IV P 49 for The Great Concert Hall, Brighton, 1867
III P 34 for the Pro-Cathedral, Our Lady of Victories, Kensington, 1870
III P 30 for St Andrews Cathedral, Aberdeen, 1871
IV P 65 for N. J. Holmes, 1875
IV P 38 for SS, Peter and Paul's Catholic Church, Cork, 1876
III P 24 for Norwich Cathedral, 1878

does suggest that Bryceson's contribution to this period of the nineteenth century London organ-building scene is more significant than hitherto thought.

Fourth period (1880-1905)

We have already discussed 'The Great Depression' and its impact on the British economy and the fortunes of some leading London organ-builders during the late 1880s. In particular, the Bryceson brothers, whilst demonstrating the skills and enterprise of their business, were not able to manage the firm's cash flow tightly enough to avoid it being bought out by trade investors. Perhaps the costs incurred in endeavouring to maintain credibility for the several electric action organs proved to be too much. If Willis is to be believed, he lost a great deal of money in building the 1886 electric action organ at Canterbury Cathedra, *vide* page 173. Perhaps the technical challenges that the Brycesons faced in building the monumental chamber organ for N. J. Holmes' residence in Regents Park proved to be too expensive.

The Bryceson firm's output in relation to other comparable firms during the period 1880 -1905, based on NPOR data, is tabulated below: [176]

176. Norman & Beard, later Hill, Norman & Beard, a prolific building firm, had its manufacturing base in Norwich, and is not therefore included in this and the following ranking for 1905-1917.

Sub-period	Bryceson	Bishop	Gray & Davison
1879-1881	26	21	42
1882-1884	10	18	30
1885-1887	9	15	30
1888-1890	8	27	26
1891-1893	2	16	18
1894-1896	3	19	17
1897-1899	4	32	16
1900-1902	2	22	16
1903-1905	Nil	11	10
TOTALS	64	181	205

We may see that in spite of the trade investment, Bryceson's fortunes steadily worsened. The trade investors must indeed have been disappointed with the firm's financial performance, so the business was formally wound up in 1901, it having been sold to the Yorkshire based firm of Alfred Kirkland some time previously. Gray & Davison, with financial troubles in the 1880s, also returned a declining performance, but not to the same extent, *vide* pp.178-9. Bishop, a firm surviving various family/management problems in the late 1880s, seems to have maintained a steady performance. The ranking of London organ-builders during this period was:

No.	Name	Output
1	Hill	475
2	Walker	339
3	Willis	337
4	Gray & Davison	176
5	Bishop	175
6	Lewis	156
7	Bevington	152
8	Ingram	116
9	Hunter	76
10	Gern	59
11	**Bryceson**	**55**
12	Speechly	51
13	Holdich	33
14	Alfred Monk	28
15	Henry Jones & Son	22
16	Fincham	14
17	Wedlake	13
	TOTAL	2,277

Gray & Davison, Hill, Walker and Willis remain in the top five builders, but Bevington dropped out, being replaced by Bishop. The Bryceson market share is seen to have dropped to 2.4%.

The final years (1905-1917)

Alfred Kirkland had bought Bryceson in1893, and in the expectation that the name still had a brand image, he continued to use the title Bryceson Brothers' name until at least 1906. Some time after the death of the surviving brother, Henry in 1909, he changed the firm's name to Kirkland & Bryceson, and by 1913, the NPOR records two organs built under this name. In 1923, Kirkland dropped the name Bryceson for his London business.

The final record of a Bryceson organ in the NPOR is dated *circa* 1920, giving the name as Bryceson Brothers. It is likely that this organ was transferred from elsewhere some years previously.

The ranking of London organ-builders during this last period is:

No.	Name	Output
1	Hill	194
2	Walker	146
3	Lewis	86
4	Willis	71
5	Gray & Davison	69
6	Bishop	56
7	Bevington	47
8	Ingram	42
9	Hunter	35
10	Speechly	28
11	Henry Jones & Son	14
12	**Bryceson**	**5**
13	Gern	5
14	Alfred Monk	3
	TOTAL	801

The output of the London based builders has significantly dropped. The impact of World War I must have been a contributory factor, but we must also note the reduction in new churches from the 1880s onwards. The impact of the lately-come Norwich based builder, Norman & Beard, founded in 1887 and with 509 instruments to its credit in this period must have seriously affected the business of the London builders. The Bryceson share, as could be anticipated from its last disappointing years, was only 0.6 %.

Our ranking review from the second period onwards does perhaps have some surprises. Walker, for example, is seen to be the most prolific builder by far. Whilst its output of barrel organs in the early years was substantial, so also was the production of finger organ later on. It is another surprise therefore that Walker did not have any worthwhile success with cathedral organs other than that at Bristol. Willis, the acknowledged icon of the second half of the century, never did better than third place in the number of instruments sold. The steady decline of Gray & Davison from second to fifth place is also surprising.

The ranking for each of the last four periods covering 1837 – 1917 is given below:

Ranking	2st period	3nd period	4rd period	5th Period
1	Gray & Davison	Walker	Hill	Hill
2	Walker	Hill	Walker	Walker
3	Hill	Gray & Davison	Willis	Lewis
4	Holdich	Willis	Gray & Davison	Willis
5	Bishop	Bevington	Bishop	Gray & Davison

Bryceson's rankings for the same periods were:

Eighth	**Ninth**	**Eleventh**	**Twelfth**

4.3 Genealogy

The name Bryceson and its variants, Brice, Brison, Bryson, Brysson, Brisson, Bruson *et al* are very old, and their origin is therefore uncertain. Bryson is by far the most popular variant, and Bryceson, the least popular. A survey of British Telecom's *Phone Books* for the United Kingdom in May 2002 listed only eleven names under Bryceson, *vide* Appendix VI.

Brysons are known to have lived in Suffolk during the sixteenth century. Brison and Brysons are recorded in Scotland in the early seventeenth century. The International Genealogical Index[177] lists 71 Bryceson births/christenings in England and Scotland over the period 1661 – 1891.

Scotland	28
England	43

Of the 43 English births, only one occurred before 1800. After this date 32 births occurred in the environs of London. There were no Scottish births recorded after 1785. The three main geographical areas for Bryceson births in Scotland are:

Kilmarnock	11
Rothesay, Bute	6
Perth	4
TOTAL	21 out of 28 births

Whilst the IGI does not represent a complete listing of all the UK births/christenings -- the destruction and loss of Parish records for the eighteenth century and earlier is significant -- the Bryceson data may, with some certainty, be construed as that of a Scottish family moving to London in the late eighteenth century. There were at least two other Scottish families involved in instrument making that moved to London in the second part of the eighteenth century: John Broadwood (1732-1812), arrived in the capital in 1761, and by 1773 had taken over the Shudi business. Shortly thereafter, another Scot, Robert Stodart, joined

177. International Genealogical Index / British Isles, The Church of Jesus Christ of Latter-Day Saints, www.familysearch.com

Broadwood as an apprentice. Further review of the English Brycesons during the nineteenth century indicates that several branches developed, flourished and then declined, with Brycesons emigrating to Australia, New Zealand, and South Africa. At least one branch became Mormon converts then emigrating to Salt Lake City, Utah.

Bryceson's promotional literature states that the business was founded by Henry Bryceson in 1796. That this took place in London is supported by the London Trade Directories, where Henry Bryceson is listed as an organ builder. Assuming that Bryceson was at least eighteen years old when he commenced trading, we have a birth date of 1778 or earlier. The IGI lists only one Henry with the surname spelt as I use it – Henry Bryceson, christened 12 January 1775 in Perth, Scotland. *Scots Origins,* an organisation associated to the General Register Office for the Scottish Government indicates his father as John, and his mother as Anna Mackie.[178]

Turning now to the British census of 1841, we find Henry Bryceson listed as an organ builder living in Tottenham Court, noting that he was born in Scotland, and that his age was 60 years. From this we have to assume a birth date of around 1781, six years before the Henry Bryceson of Perth. Reference to the 1851 Census again confirms a Scottish lineage, but gives his age as 75 years, or a birth date of 1776. Given that the census was almost certainly conducted after 12 January, this matches a birth date of 1775. We may now reliably assume that the 1841 census has an error of some five years in Henry's age. Both censuses provide not only the birth place and occupation of the head of the household, but also those living in the house at that time.

178. *Scots Origins* in association with the Gen. Reg. Office for Scotland, www.scotsorigins.com

1841 Census

	Relation	Age	Trade	Born
Henry-head [as it appears in the census]	Head	60	ob	Scotland
Fra's-wife [as it appears in the census]	Wife	40		Middlesex
Frances-daughter	Daughter	12		"
Henry-son	Son	8		"
John-son	Son	2		"
2 female servants				

1851 Census

Henry	Head	75	ob	Scotland
Frances	Wife	52		Chelsea, Middx
Henry	Son	18	ob	Pancras, Middx
		apprentice		
John	Son	12	scholar	Pancras, Middx
1 servant				

What the censuses do not tell us is that Frances was Henry's second wife. A study of the IGI records that he was previously married to Louisa Gray (1792-1823) in 1821, and that a son – Henry – was born in 1822. Louisa and the child died soon after the birth. This supposes a question: was there a connection between Louisa and the Gray organ-building family? His second marriage to Frances Martin is recorded in 1827. The IGI tells us that Henry had three siblings: John b. 1767, Catherine b. 1768 and Walter b. 1773. The IGI also identifies William b. 1771, giving the father as John Brysson and mother as Ann Mackie. It is likely that Brysson is a misspelling in the Parish or IGI records for Bryceson. Another sibling, Ann b. 1777 has been recently identified by David M. Mobbs,[179] a Bryceson family genealogist, although there is no record in the IGI. All the siblings were born in Perth, so that the earliest date for the removal of John Bryceson's family to London is 1777, when Henry was about two years old.

---

179. David M. Mobbs is a distant relative of the Bryceson family, responsible for the compilation of an unpublished draft Bryceson genealogical table in 1994

As we have seen, Henry Bryceson founded his business in 1796 when he was 21 years old. His second marriage to Frances Martin in 1827 at the age of 52 years was successful in producing five identified offspring: Frances b. 1828, Elizabeth, b. 1831, Henry, b. 1832, Fanny [Francis] b. 1836 and John b. 1839. The fate of Elizabeth is unknown; she did not appear in the 1841 census, so presumably died as a child. Fanny, as we shall see below, had a long life. Henry and John were both apprenticed to their father's organ business, and later took it over as Bryceson Brothers, following the retirement of Henry Snr in 1864. The old man died in Huntingdon in 1870, at the age of 95 years, *vide* Figure 63.[180]

The brothers never married. John died in 1908, and Henry in 1909. An obituary, published in the journal *Musical Opinion* of April 1909, is shewn in Figure 64.[181] Fanny [Francis} was the only surviving sibling and 'being the natural and lawful sister and only next of kin' was the person to whom Letters of Administration for Henry's estate were granted, *vide* Figure 65.[182] Fanny died in 1916 at the grand old age of eighty years.

A Bryceson genealogical table is shown in Figure 66.

180. Family Records Centre, Islington, Death Records, vol. 3b, p.173

181. Editorial, *Musical Opinion* 379 (April 1909), p. 518

182. Letters of Administration for the Estate of Henry Bryceson, Probate Registry Office, High Holborn, London

CERTIFIED COPY OF AN ENTRY OF DEATH

GIVEN AT THE GENERAL REGISTER OFFICE

Application Number R 423151

REGISTRATION DISTRICT	Huntingdon
1870 DEATH in the Sub-district of Huntingdon	in the County of Huntingdon

Columns:– No.	1 When and where died	2 Name and surname	3 Sex	4 Age	5 Occupation	6 Cause of death	7 Signature, description and residence of informant	8 When registered	9 Signature of registrar
473	Fifteenth June 1870 Brampton	Henry Bryceson	Male	95 years	Retired Organ Builder	Senile decay Certified	Catherine ~~[illegible]~~ Cryst present at death Brampton	Sixteenth June 1870	Edward Hyped Brislin Deputy Registrar

CERTIFIED to be a true copy of an entry in the certified copy of a Register of Deaths in the District above mentioned.

Given at the GENERAL REGISTER OFFICE, under the Seal of the said Office, the 12th day of February 2003

DYA 088025

See note overleaf

CAUTION: THERE ARE OFFENCES RELATING TO FALSIFYING OR ALTERING A CERTIFICATE AND USING OR POSSESSING A FALSE CERTIFICATE ©CROWN COPYRIGHT

WARNING: A CERTIFICATE IS NOT EVIDENCE OF IDENTITY.

Figure 63 Death certificate of henry Bryceson Snr.
(source: Family Record Office, Middleton Road, Islington)

Death of Mr. Henry Bryceson.

WE regret to record the death of this well known organ builder, which sad event took place on January 4th, at his Canonbury home, heart failure complicated with Bright's disease taking him hence in his seventy-seventh year.

Henry Bryceson was a Londoner, having been born in Tottenham Court Road. He was educated at the N. London Collegiate School and at University College, was a good classical scholar, spoke three or four languages and had travelled a good deal. He served his time in his father's organ factory, commencing at the bottom of the ladder and working his way up like an ordinary apprentice. In business matters the deceased gentleman was methodical and thorough, a considerate master as his employees testify. In private life his tastes were simple, he trequently boasting that he only eat two meals a day,—breakfast and dinner. But they were meals! He was a good conversationalist and an entertaining companion.

Mr. Bryceson was fond of hunting and was a good judge of a horse; but in later years his usual recreation would be a trip to France, Holland or Belgium in the company of his brother John (who predeceased him in August last).

The organ building business (now carried on by Mr. Kirkland of Holloway) was established so long ago as 1796, the founder we understand being the inventor of the barrel organ that led the music in many churches.

The words of a client of some thirty years' standing may well close this brief notice: "Mr. Bryceson was an exceedingly clever man and a thorough gentleman; his loss will be keenly felt and his place difficult to fill."

Figure 64 Obituary of Henry Bryceson
(source: *Musical Opinion* 379 (April 1909), p. 518

Administration.

DEATH ON OR AFTER 1st JANUARY, 1898.

BE IT KNOWN that Henry Bryceson
of 95 Cannonbury Avenue Highbury in the County
of Middlesex

died on the 4th day of January 1909
at
95 Cannonbury Avenue aforesaid.

intestate a Bachelor without Parent

AND BE IT FURTHER KNOWN that at the date hereunder written Letters of Administration of all the Estate which by law devolves to and vests in the personal representative of the said intestate were granted by His Majesty's High Court of Justice at the Principal Probate Registry thereof to Fanny Bryceson of Woodleigh Harold
Wood in the County of Essex Spinster the
natural and Lawful Sister and only next
of kin
of the said intestate.

Dated the 29th day of January 1909.

Gross value of Estate ... £ 108. 11. 10.
Net value of Personal Estate £

W B & L (xx)—50962—6000-10-6
6:1930—10000-9-7

Figure 65 Letters of Administration for the estate of Henry Bryceson
(source: Principal Registry of the Family Division Probate Department, High Holborn)

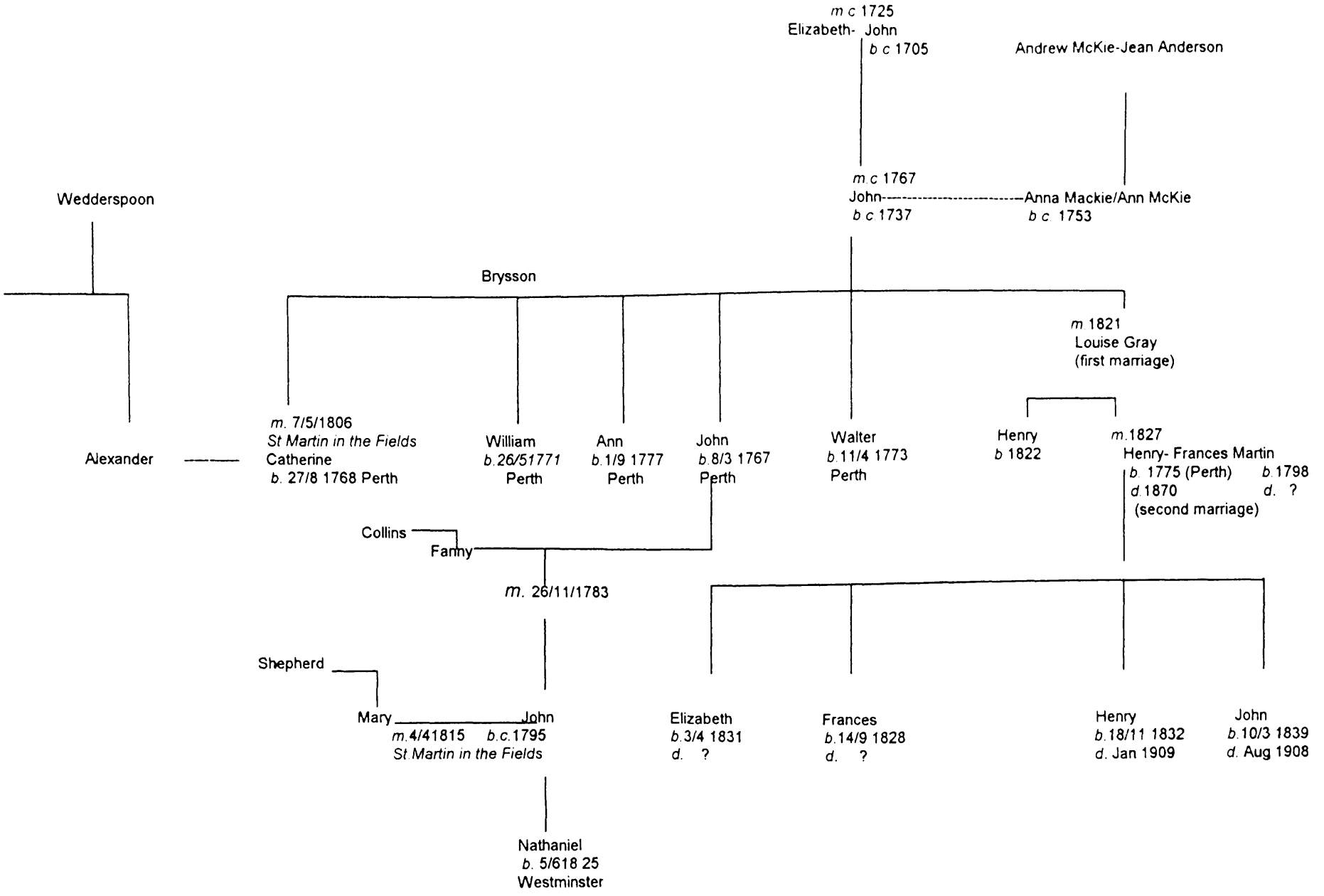

Figure 66 Bryceson genealogical table

4.4. Training and education

Some time between the birth of Henry Bryceson Snr in Perth during 1775 and 1796 when he set up business in London, the Bryceson family (father, mother and six children) moved to the metropolis. In 1796, Henry Snr was no more than 21 years old and a London apprenticeship of seven years would put the latest year for the family's move to London as 1789, when he was 14 years old. We may assume that the earliest date at which the move to London took place was probably 1776, shortly after Henry's birth.

Henry's training in organ and/or pianoforte making was likely to have started no earlier than 1788 when he would have been thirteen years old. The two Scots, Broadwood and Stodart, were well established in London at that time and were therefore in a position to train Bryceson, either formally as an apprentice, or less formally as a working boy. Until now no corroboration has emerged.

London organ-builders during the period 1788 -1795 included John Avery, Benjamin Flight, John Gray, Green, James Hancock, John Pistor and Hugh Russell. Who amongst these took on the boy? We do know that Bryceson was known for his barrel organs in the early part of the nineteenth century some years before T. C. Bates and J. W. Walker were in business. Flight was a barrel organ-maker of some distinction and James Hancock was a builder of chamber organs, and so was Pistor, so any of these three could be candidates. There is a suggestion of a relationship with Flight in a letter from Henry Bryceson 'a celebrated organ builder of the period' to J. L. Wedgewood:

> I believe the Pyramidon never passed the experimental stage in an organ built by Flight for Sir Fred. Ouseley's College Chapel in S. Wales. On enquiry he, [Flight] only smiled about the stop, so, evidently, he had no great opinion of it.

Henry Bryceson Jnr, the subject of this work, was born in 1832 when his father was 57 years old. By then the firm was well established and the boy was given what appears to be a good education at the North London Collegiate School and later at University College.[183] His obituary said that he was a 'good classical scholar' and 'spoke three or four languages'. The obituary also remarks that he started in his father's organ factory, starting at the bottom and working his way up as a ordinary apprentice.

Presumably, the young Bryceson started his apprenticeship after his school education, but how he fitted in his time at University College is a puzzle. Perhaps he attended the college as a night-school student. Examination of the archived registers at University College did not discover any records. There is another strange matter; the North London Collegiate School was not founded until April 1850 (by Frances Mary Buss), when Henry was around 18 years of age. It is an outstanding school to this day, but it has always been a school for girls.[184]

We have found nothing about John Bryceson's education, but although the statutory school leaving age in the 1830s was only eight years, we may be sure that a boy of his class would have his education extended well beyond that. It is likely that he left school at around thirteen years, and went immediately into his father's works as an apprentice.

As an aside, C. S. Barker came to London in 1821 or thereabouts, *vide* Appendix I, page 314. Given the later licensing relationship with the Bryceson brothers from 1867 onwards and the supply of soundboards for Barker's last project in Ireland after his return from France in 1871, it is tantalising to wonder whether Barker obtained his familiarity with organ construction in the Bryceson workshop during the period 1821-1830.

---

183. Henry Bryceson's Obituary, *Musical Opinion* 32 (April 1909), p. 518

184. *A History of the County of Middlesex* vol. I (1969), p. 308

4.5 The Peschard - Barker - Bryceson relationship

It was not until 1891 that the name and works of Albert Peschard were put before readers in the British organ world. A series of five short articles on the development and future of the electric organ was published in *The Musical Standard* during the spring of that year.[185] The author is unknown, but we may assume in the absence of any attribution that it was the journal's editor. The first article took the reader through the patented proposals of Henry Gauntlett, John Wesley Goundry, Charles Barker, Bryceson & Co. and C.K.K. Bishop, albeit the descriptive material was brief and occasionally inaccurate. The second article devoted itself to the work of Robert Hope-Jones, as did the third article in the series. The fourth article reported on Hope-Jones' paper of May 1891 to the College of Organists and in particular, the builder's discussion on a 'fairy tale of science': the future organ as an instrument without pipes or reeds.

It was not until the fifth article that the author introduced the names of Du Moncel, Stein and Albert Peschard. It seems strange that such an historical review put the earliest development of electric action in the last article, with its implications of the future. One of Peschard's later works, *Les premières applications de l'électricité aux grandes orgues*, published in 1890 may have come to hand after the series started in April 1891.[186] This book provides an in-depth history of Pescard's experiments at the Abbaye aux Hommes, Caen, his relationship with Barker, and the first French organs built to the Peschard- Barker system. In any event, and in spite of the less than cordial Anglo-French relationship of the early 1890s, the article concluded that 'the honours of the application of combined electricity and pneumatics must remain divided between the Frenchman Albert Peschard and the Englishman Charles Spackman Barker'.

---

185 'The past and future of the Electric organ' *The Musical Standard* 1395 (25 April 1891), pp. 341-43; 1396 (2 May 1891), pp. 365-67; 1397 (9 May 1891), pp. 385-86; 1398 (16 May 1891), pp. 405-6; 1399 (23 May 1891), pp. 425-6

186. Peschard, Albert, *Les premieres applications de l'électricité aux grande orgues* (Paris: La-Rousse, 1890)

We should also record that Hope-Jones, in his paper to the College of Organists, whilst making reference to 'attempts' made by 'distinguished men' during the 'last thirty years', did not name a single individual.[187]

Peschard was certainly known in his home country, for his first publication on the electric organ was published in 1865, and his two patents also date from around that time. So, how do we account for the gap of a quarter of a century before his name was reported in the British press? There was an opportunity in 1868 when Henry Bryceson presented his seminal paper on the electric organ in that year.[188] It is astounding that a paper with its historic descriptions, not only of Barker and his electric action work in the early 1860s, but also his exchange of letters with John Camidge (the York Cathedral organist), his development of the eponymous lever for Cavaillé-Coll's St-Denis organ, his ensuing career in Paris together with other important events, did not mention Peschard or even Pierre Stein. We must conclude that Bryceson did not previously know of their work and that Barker (who knew both men and was aware of their developments) did not feel it necessary to inform him. Hinton who knew Barker during the later years of the 1860s recollected that Peschard's name was rarely mentioned except in the context of a problem that he had to contend with, and that he did not know whether he was a living or dead scientist. Why should Barker be so sparing of the history? To understand better the reason for this deviousness, we need to look again at events in the previous year.

The Paris *Exposition Universelle* of 1867 was a major event for France. It was the Emperor Napoleon's answer to the challenge posed by the London International Exhibition of 1862 and the Emperor had decided that the French could and should surpass the efforts of their ancient rival. Although Bryceson had exhibited an organ at the great Exhibition of 1851,

---

187. Hope-Jones, Robert, 'Electrical Aid to the Organist', College of Organists, Lectures 1890-91 (5 May 1891)

188. Bryceson, Henry, 'Description of the Electric Organ', *J. Soc. Arts* 840 (25 December 1868), pp. 81-90

he had passed up the opportunity of taking space at the London International Exhibition of 1862, although several of his competitors, including Bevington, Hedgeland, Henry Jones, Walker and Willis demonstrated their products in Class 16 (Musical Instruments). The 1867 Paris exhibition was altogether a more worthwhile opportunity in Bryceson's eyes, so he shipped across a 'medieval gothic' (the catalogue's description) instrument for listing under Class X (Musical instruments).[189]

As we have already noted, Bryceson engaged a leading London organist, one Augustus L. Tamplin, to demonstrate the two manual instrument of sixteen stops.[190] The exhibition lasted for seven months and no doubt Tamplin had time for extra mural activities. The Barker electric organ at St-Augustin was under construction and Tamplin was able to play the instrument several times, and these occasions he would have met and talked with his fellow Englishman, Barker. [191]

At some time during the course of the exhibition, Henry Bryceson went to Paris, where Tamplin introduced him to Barker, and was invited to inspect the St-Augustin organ.[192] In Bryceson's own words 'we at once recognized the impending revolution in large instruments, and finally arranged, on Mr Barker's completing his patent in England early this spring [1868], for the grant of sole concession in this country. In the meantime we determined to introduce the system successfully in England. Subsequently, at Mr Barker's urgent request, we gave up the sole concession, as he afterwards thought, by being only in the hands of one firm, it would delay the general adoption for all large work, and, consequently, yield him less profit during his lifetime than if he were to grant concessions [licence] to whoever might require them, although we retained the full use of the patent'.

---

189. Communication from Jonathan Hopson, National Art Library, V & A Museum (29May 2002)

190. Hinton, J. W., *Story of the Electric Organ* (London: Simkin, Marshall *et al.*, 1909), p. 46

191. Tamplin, Augustus L., *The Musical Standard* (29 February 1868), p.95

192. Byceson, Henry, 'Description of the Electric Organ', *J. Soc. Arts* 840 (25 December 1868), p. 84

To complete the story, we return to 1860, the year that Peschard commenced his experimental work on the Lefebvre organ in the Abbaye aux Hommes. The organist was encouraged by the results and sought the services of an organ-builder who could put his concept into practice. He is likely to have approached Cavaillé-Coll, the leading organ-builder of that time, but there was a luke-warm response from Barker, who travelled to meet Peschard in Caen. By July 1862, Barker at last seems to be convinced that an electric action following the principles of the telegraph was feasible. A formal agreement was made between Barker, Verschneider, his partner, and Peschard, who prepared the final text. A company was then set up with the name Peschard-Barker. Initially, Peschard felt that direct electric action was feasible, but his partner was convinced that this would need very powerful batteries and that there would be electrical contact problems. Perhaps he was aware of Stein's patent and difficulties with his1855 exhibition model. It was, according to Barker, his idea to use a pneumatic lever to do the work.

Dissension between the two men now became apparent. In spite of the formal collaboration agreement, Barker took out a patent on the ' Système *peumato-éléctrique'* action on 24 October 1862 as the sole inventor, (later historians seem to be unaware of this patent, probably because it is not listed in the French Patent Office subject index, *vide* page 96). Peschard responded with his own patent on 12 November of the same year, and with a further patent on 13 April 1863 that encapsulated his ideas on direct electric action. Progress thus far, for which he claimed full credit, was summarised in his brochure of 1865.[193] In spite of this, Barker was to say that the only part of the new system that Peschard had invented was the mercury contact pot.[194] It should be recorded here that Hinton and later writers refer to a joint patent taken out by the two men. I have not found such a patent and believe that Hinton was in error. Soon after, Pierre Stein

193. Peschard, Albert, *Application de l'électricité aux grandes orgues,* (Caen: le Blanc-Hardel, 1865)

194. Barker, C. S., *Réponse au mémoire de M. Peschard sur l'application de l'électricité aux grande orgues,* (Dieppe: 1865)

(Burg calls him Émile) realises that the ground is slipping from beneath his feet and issues a public letter claiming that his patent of 1852 has precedence and that 'despite all the weaknesses and mistakes, the direct action electromagnets could be called a success. The pneumatic lever is just ridiculously superfluous'.[195]

Barker and Verschneider, with Peschards's cooperation, went on to build the world's first electric organ at Salon, Bouches du Rhone in 1866 (with electro-pneumatic action). This cooperative venture continued for the St-Augustin organ and then for the St-Pierre de Montrouge instrument, where the collaborators introduced a second pneumatic motor in series with the primary motor to relieve the load on the electromagnet. Thereafter the collaboration came to an end on Barker's hurried departure for Ireland in 1870.

Peschard continued to develop his system until 1900 when he exhibited his latest low-energy multi-motor system at the 1900 Paris *Exposition.* During these 30 years, he defended his work against the Schmoele & Mols system with a vigourous attack on those organ-builders (Merklin *et al.*) who claimed that electric action was an American invention.[196] His book of 1896 is indeed a substantive record of his work and innovative claims to a world that had given him little recognition except in France, and one that was treading new frontiers of technology.[197] In all this time, Peschard never uttered a public word about Barker's unwillingness to recognise those fundamental contributions that gave Barker the tools for his undoubted success as the builder of the world's first practical electric organs. Hinton in the second edition of his book *Organ Construction,* and later in his *Story of the Electric Organ*, endeavoured to acquaint English readers with the history, but he held a brief for Barker as well.[198]

---

195. Stein, Émile, *Réponse à la réponse de M. Barker au mémoire de M. Peschard sur l'application de l'électicité aux grandes orgues* (Paris: 1867), B. N. book shelf, V p 17490, 15 pages

196. Peschard, Albert, *L'orgue électrique n'est pas d'origine américaine* (Paris: 1892)

197. Peschard, Albert, Étude*s sur l'orgue électrique* (Paris: imprimerie Larousse, 1896)

198. Hinton, J. W., *Story of the Electric Organ*

Barker had already courted controversy with his pneumatic lever patent. Was he really the inventor, or was it Hamilton whose lever is still exhibited in the Russell Collection, Edinburgh. Barker was later made a *Chevalier d'Honneur* by the French Emperor for his invention. But in 1868, the controversy was raised during the discussion following Henry Bryceson's paper to the Society of Arts. Bryceson was forced to defend Barker's reputation in a subsequent letter to the musical press.[199] Since then, Barker's apparent cavalier attitude to intellectual property has, from time to time, been questioned.[200] That Peschard probably did not benefit financially from his relations with Barker is likely, but then did Barker? At least Peschard was awarded a Gold Medal at the 1900 *Exposition universelle.*

---

199. Bryceson Brothers & Co., The *Musical Standard* (28 March 1868), p.138

200. Wedgewood, J. I., *The Organ* 53 (July 1934), p. 49-53

4.6 Other inventions

Like other leading organ-builders, the Bryceson firm introduced its fair share of innovative ideas. We may discount any originality in the development of barrel-organ technology, in spite of the attribution in Henry Byceson's obituary to his father's role as the inventor of the automated organ. Indeed, we have seen that the decades when the old man was actively involved were those of conservatism rather than progress. The influence of the sons, who took charge from the 1860s onwards, put the firm on a sound technological footing that marked it out as everything but a jobbing organ-builder. The pioneering role of Bryceson Brothers concerning electric action has been discussed, but there are other developments that are worth consideration.

The most notable invention, although not patented, was that of powerful foghorn for use at sea. B. B. Edmonds records that in 1884 at Blackwall on the river Thames 'in the presence of the Admiralty and the Trinity Brothers, a trial was made of an instrument - the invention of Mr Bryceson the organ builder – for signalling the approach of a vessel in the fog...a powerful pipe on which, by suitable gearing, loud or short (*sic*) blasts can be produced'.[201] The 1885 official catalogue for the 1885 International Inventions Exhibition has the following entry:[202]

> Group III. Engineering, Construction and Architecture
> No. 248. BRYCESON, JOHN, Charlton Works, Islington, London, N.
> – Continuous Blast Fog Horn, for use on ships pier-heads, lighthouses, etc. Long or short blasts can be produced, so that a code can be signalled.

There is no further detail, but I envisage an automated barrel mechanism for the control of the blasts.

---

201. Edmonds, B. B., *BIOS Reporter* 2 (April 1996), p. 22

202. Private communication from Jonathan Hopson, National Art Library, V & A Museum 10 May 2002

Just over ten years later, Robert Hope-Jones took out his patent for a diaphonic foghorn. Hope-Jones remarked that that the sound was so appallingly powerful that it could swallow up the sounds of the loudest steam siren. Unfortunately, Bryceson did not patent his device, so we do not know how similar the inventions were. No doubt Hope-Jones would have denied all knowledge of the earlier work, just as he had done about Bryceson's electric action.

In 1880, A. J. Ellis published a work in which there was a table of musical pitches that were speculatively known to exist as early as 1308 up to 1880.[203] Today, the pitch of a' = 440 Hz, first mooted at a Congress in Stuttgart during 1838, is generally recognised. The Ellis table listed 28 pitches used in the period 1850-1880 that ranged from a' = 432.0 Hz to 484.1 Hz. It is not surprising that itinerant wind and brass players were faced with real difficulties that could only be overcome by purchasing new instruments. The table records that the pitch employed by the Bryceson Brothers in 1879 was a' = 454.7 Hz, identical to that of Steinway's English pitch and only a little lower than Erard's London pitch of a' = 455.3 Hz. The average of the pitches used by London orchestras during the period 1850-80 was a' = 450.0 Hz, although a' = 454.7 Hz was the highest pitch adopted for the London Philharmonic concerts. The Willis organ in St. Paul's Cathedral was a' = 444.6 Hz in 1877. Can we deduce from this that Bryceson was setting out its stall for concert organ sales? No doubt the other leading builders had their in-house standards, but none is listed in Ellis's work.

Bryceson Brothers is credited with the first use of the Harmonic Diapason, an 8 ft Diapason with double length pipes overblown to speak the first harmonic.[204] The pipes are of normal length below middle C or tenor G. It seems that the harmonic treatment dulls the tone to a point where it is no longer a Diapason, and does not support a Diapason chorus. Instead of blending with the flue chorus, it cut through it, being raucous and unduly assertive. No one is recorded

---

203. Blood, Brian, 'Music Theory On Line: Pitch, 27 - Temperament & Timbre' http://www.dolmetsch.com/musictheory27.htm

204. Wedgewood, J. L.., *A comprehensive Dictionary of Organ Stops* (London: Vincent, 1905), p. 85

as thinking very highly of the stop. The firm included it in its organ of 1882 for the Concert Hall in Paisley, Scotland, Rugby school Speech Room and St. Columbia, Columb Major, Cornwall.

Another stop that Bryceson appears to have introduced is the Campana, an Italian name for a bell-like stop. It had a pitch of 1 ft and Bryceson included it in his 1876 organ for St. Paul, Rusthall in Kent.[205] A similar stop was built by Willis for the Queen's College, Oxford organ in 1866, but his stop, at 1 ft pitch, broke back at every octave.

Although the firm's patents of 1868 and 1869 were reviewed in Section 3.3.1, in relation to electric actions, we should remember here the two inventions included in the Patent Specifications that are not concerned with electric action, namely the so-called pneumatic pallet and the use of water as an hydraulic fluid for the proportional transmission of the swell pedal movement to the swell shutters. Both these ideas were put into practice by the firm and although later abandoned, have the potential, with the later introduction of the centrifugal fan and new materials of construction, for practical application today.

All this marks out the Brycesons, as a pioneering business willing to take on and develop new ideas from the time the founder effectively retired from the business in 1865, leaving the care of the firm to his sons. Three examples are the ready acceptance of the Barker lever, the early use of hydraulic apparatus, and gas engines for raising wind. Of course, the most significant contribution by far was the licensing and improvement of Barker's electric action. So, the technical approach exhibited by the brothers effectively set the firm apart from the jobbing organ-builder and secured for it an established position in the London organ-building world of the eighteen seventies and eighties.

---

205. Wedgewood, J. L., *Ibid*, p.18

4.7 Publications and sales promotion

Four promotional activities are here considered: papers to learned societies, exhibitions, house pamphlets, and advertising in musical journals.

Technical papers

I have found two publications, both written by Henry Bryceson. Elements of the first, written in 1868 and delivered to the Society of Arts in London, have already been discussed. I am not aware of any other paper by a nineteenth century organ-builder that approaches the quality of Bryceson's work as measured by historical content and an unbiased view of electric action technology as it stood that time. The paper represents a seminal contribution that later historians used as a prime source throughout the twentieth century.

The second paper was presented to the College of Organists in 1876. Whilst the College is aware of the presentation, it has no record of the paper itself. Fortunately, Bryceson Brothers published an abstract in the form of a pamphlet (*vide* Figure 67) and a short editorial was published in *The Choir.* [206] A list of the key points discussed by Henry Bryceson are:

1. No 'complete and pure system' has yet been devised for tubular transmission, although its application to the pedal organ is useful.
2. Where parts of the organ are to be separated or the console is detached, electric action is appropriate, with a pneumatic transmission for the draw stops.
3. The importance of studying the dimensions and acoustic of the building before drawing up the stop specification
4. A preference for the straight pedal-board in place of the variety of concave and radiating boards that are used.

---

206. Editorial, *The Choir* Vol. XV (November 1876), p. 85

The following is an extract from the paper read at the College of Organists, by Mr. Henry Bryceson, 1876—the same observations, however, are still applicable in 1901:—

I have been asked, with only a few days' notice, to say something about the construction of modern organs. I cannot, of course, do justice to such an extensive subject within the limits assigned, especially as you will wish naturally to learn more from me than is possible without a careful study of diagrams on your part. What I now put before you must be regarded as merely elementary—a crude beginning of something better conceived, and more elaborately treated, if some future opportunities occur.

As organists, busily engaged in professional life, few of you can spare the necessary time for watching the ever-varying construction of organs, or gaining the knowledge that is imperative to qualify a just opinion—erroneous notions or imperfect acquaintance with the art must seriously prejudice your advice—which is so often asked and freely taken by committees and others ordering organs. You will readily admit the very responsible position you occupy, and your influence for good or for evil as regards the selection of a builder or the specification to be adopted.

Thoughtful consideration of all this should awaken an interest in any method which can be devised for saving your time and assisting your fair judgment. I now propose to glance at leading features only, and to offer a few remarks which may serve to open the whole question.

. . . . . .

As regards tubular transmission for the key action, I am not aware that any complete and pure system has yet been carried out direct from the manual to the sound-board pneumatic or pallet. Much remains to be perfected before general utility is reached. The very heavy pressure wind or exhaust necessary to ensure precison becomes a consideration, entailing, as it does, leakage, consumption of blowing powers, and strain on the bellows, which is much in excess of what is otherwise requisite. Under these circumstances, I have not prepared any diagrams to show you. However, tubular transmisson is very useful for pedal organs, and for connecting the largest class of front pipes with the great organ sound-board, instead of using a common conveyance as heretofore.

In places where parts of an organ must be detached, or the key-boards separately disposed of in some irregular position, what has already been done seems to justify the idea that the electric key action and tubular drawstop action is likely to meet such requirements with less expenditure and more advantages than may generally be known.

After all, the tone of a new organ will always be a matter of considerable anxiety. Before settling the specification or list of stops, weights of wind, &c., the dimensions and requirements of the building have to be studied with the utmost care; otherwise the best of voicing will not make up for any oversight on this score, or for having undertaken to crowd too much into an inadequate space. Although mentioned last, this is really the first step taken by a prudent organ-builder.

In conclusion, I would offer some practical observations for your consideration. The concave and radiating pedals seem to gain but few admirers after a long trial, and it is a question whether the straight pedal-board, with uniformity of scale and position, would not be preferable to so much variety, which necessitates practice each time an organist goes to a fresh instrument.

The convenient disposition of accessory pedals, as well as their relative position and distance apart, might also be studied, as hardly two organs have any similarity. This is not the case with the manuals now, and it need not be so with the pedals, if some established rule were laid down.

The Continental system of ventil pedals, introduced here many years ago, and sometimes advocated afresh, will not supersede English combination pedals or pistons now, at all events. But the occasional employment of ventils in connection with combination pedals may prove useful, if it does not tend to perplex the player as to the real state of his organ when his attention is otherwise engrossed.

With regard to the position of organs in churches, it is now fairly conceded that the organ must follow the choir to the east end of the building.

The evils of the modern chamber may be much mitigated, if not altogether removed, when proper steps are taken to afford sufficient room, and large openings into the body of the church, especially towards the west side. I have always found architects most willing to adopt any suggestion from an organ-builder, if it came in time. Therefore the matter cannot be watched too soon if the authorities are to be advised. Much better accommodation has lately been provided through public attention being drawn to the subject. Formerly these chambers were only architectural features, devoid of any real conception as regards receiving an organ; and very often no thought was taken as to how the tone was to travel into the church with sufficient strength to support the singing.

A fruitful source of error and failure arises from drawing up a specification which has no reference to the space available for its reception, the scales of pipes which should be employed, or the casework necessary to clothe the organ fittingly. The scheme is then submitted to several builders for estimating, and the lowest tender stands the best chance. Under these circumstances, no builder cares to offer a word of advice; some decline the matter altogether, whilst others calculate for small scale bases and most primitive construction in giving the price.

Again, a certain sum of money is fixed upon, and builders, perhaps of unequal merit, are applied to. Those who offer the longest list of incomplete stops, and put forward the most descriptive matter, satisfy *quasi* judges, who crave for quantity, and sacrifice quality without realising it.

Specifying the scale of the largest pipe in some stops, or naming that spotted metal is to be employed throughout, will prove no safe-guard, when the just proportion of the former and the proper substance of the latter cannot be laid down for each stop.

Zinc of good thickness is unquestionably the best material for metal pipes from thirty-two feet to eight feet. From eight feet upwards various combinations of metals can be introduced with advantage, the finest being reserved for trebles.

If competition must be had recourse to for gaining information, let it be as limited and equal as possible. But it is far better where careful comparison of actual work and tone can be made the means of selecting the builder, who should be made thoroughly responsible for the instrument which is to bear his name. A reasonable time should also be allowed for building a well-finished and durable organ.

BRYCESON BROTHERS,

Figure 67 Pamphlet relating to Henry's Bryceson's paper to the College of Organists

5. The superiority of the English combination pedals and manual pistons to the continental ventil pedals.
6. The concession that 'the organ must follow the choir to the east end of the building'
7. A purchaser's assessment of a builder should be made on his reputation rather than an incomplete paper specification. Also adequate time should be allowed 'for building a well-finished and durable organ'.

Bryceson's comments on pedal board design were not inappropriate. It was not long after that The Royal College of Organists (as it became) set up a committee to review the matter, resulting in a standard RCO design used throughout the English speaking world to this day. Perhaps also we might regard Bryceson's preference for the straight board as one that could once again find approval in English organ design. The recent installation by Klais of a large eclectic organ with a straight pedal-board in the Chapel of Haileybury College is perhaps a sign of reaction to the RCO board.

None of these issues is contentious or novel but the tenor of the writing, especially that of the *J. Soc. Arts* paper suggests that Bryceson had a balanced approach to history and technology that was not unduly influenced by the dogmatic marketing promotion exhibited by the newer competitors, such as Casson, Gern and Hope-Jones.

Exhibitions

The Bryceson firm supported several international exhibitions during the course of its long trading life. A list, by no means necessarily complete, of those at which the firm was present, is given below:

1. The Great Exhibition, 1851

It was the success of the French Industrial Exposition of 1844 that prompted the British event. The architect, Joseph Paxton, provided the winning entry for the design of the building and its environs in Hyde Park, London, that came to be known as the Crystal Palace in which organs were exhibited.

Organ-builders from three countries were represented at the Great Exhibition, held during the period 1 May – 15 October 2004. Apart from the French Company, Ducroquet, there were single entries from Germany and Italy. William Pole (1814-1900), organist of St. Mark's Church, Grosvenor Square, and an eminent scientist, wrote a 99-page book on the musical instrument exhibits in the Great Exhibition, of which he devoted nineteen pages to the fourteen organs. [207] Altogether there were ten English builders who exhibited instruments. These were:

Bishop	Hill
Bryceson	Holdich
Dawson	Robson
Gray & Davison	Walker
Forster & Andrews	Willis

All were London builders, with the exception of Forster & Andrews of Hull. The other two foreign builders were Schulze of Germany and A. & M. Ducci, of Italy. The Forster & Andrews single clavier instrument escaped mention by Pole.[208]

---

207. Pole, William, *Musical Instruments in the Great Industrial Exhibition of 1851* (London R. Folkard, 1851)

208. Freeman, Andrew, 'Organs at the 1851 Exhibition, Hyde Park', *The Organ* 90 (October 1943), pp. 87-90

The official catalogue has the following entry under Class 10. Philosophical, musical, horological, and surgical instruments: 'No 735 BRYCESON, H. 5 Tottenham Court road. - Powerful church barrel-organ in a gothic case'. It had six stops and three barrels, each with twelve tunes. Bryceson also entered a trade advertisement for the barrel-organ, shewn in Figure 68. The same advertisement was retrieved from a Bryceson barrel and finger-organ at Lilbourne.[209] The price range of 50 – 100 guineas is around £3,200 - £6,400 in today's money.

2. Paris Exposition, 1855

The first French international exhibition took place in 1855. It was here that Barker exhibited his improved pneumatic lever for which he was honoured with a Gold Medal and made a *Chevalier de la légion d'Honneur* by the Emperor himself.

3. London Exhibition, 1862

There was an International Exhibition in London during 1862, but Bryceson was not listed among the exhibitors in Class 16 (Musical Instruments), and the event was generally regarded as a failure.

4. Paris Exhibition, 1867

The next occasion that we hear of Bryceson is the Paris *Exposition Universelle* in1867, twelve years after the 1855 event. This was the Emperor Napoleon's opportunity to demonstrate French superiority with their industrial and artistic talents, following Britain's lacklustre Exhibition in 1862. This time, Class X (Musical Instruments) in the Catalogue of the British Section of the Exhibition lists Bryceson Brothers &Co., Brook- street, Euston-road, London as having entered 'A mediaeval gothic organ'. No specification is given therein, but *The Musical Standard* published the complete stop list with some information on the case. It was a large organ at 30 ft 9 (9,373 mm) in height, 8 ft 6 in (2,591 mm) at its base,

---

209. Davidson, Hilary, *Choirs, Bands and Organs* (Oxford: Positif Press, 2003), pp. 35 and 116

GREAT EXHIBITION, 1851.

HENRY BRYCESON,

No. 5,

TOTTENHAM COURT, NEW ROAD, ST. PANCRAS.

Respectfully begs to introduce to the notice of Clergymen and others, his excellent

BARREL ORGANS,

built on a peculiar construction, and adapted to the service and dimensions of any Church. To those who wish to promote good Psalmody in their Congregations, they are a certain guide; the Tunes are so correctly set, as to be equal in performance to a Finger Organ, and will entirely supersede the use of other Instruments. The Prices (with three Barrels,) vary from 35 Guineas to 100 and upward.

These Instruments from their simplicity of construction and arrangement, and the facility with which the tunes can be changed, are not liable to get out of order; and for quality of tone, durability, and price, are not surpassed, if equalled, by any other House.

H. B. has received many Testimonies of approbation for Organs of this description that he has built; and can give reference to a greater number of Churches, where they may be seen, than any other Builder in London: also Specimens may be seen at his Manufactory, as above.

A great Variety of Finger, and Finger and Barrel Organs combined, made of the best seasoned materials and good Workmanship, constantly for Sale.

North Transept Gallery,
CLASS X. No. 735.

Figure 68 Henry Bryceson's trade advertisement used for the Great exhibition Catalogue of 1851
(source: The Official Catalogue – Class 10. Philosophical, musical, horological, and surgical instruments, National Art Library, London)

14 ft (4,267 mm) wide over the upper front, and 5 ft 6 in (1,676 mm) deep. [210.] The organ was of substantial construction and designed for a shallow position in a chancel close to the choir. Its woodwork was coloured, stencilled and gilded, whilst the display pipes were richly illuminated in gold and colours.

The modest stoplist is:

Great organ		
1. Open Diapason	Metal	8 ft
2. Violin Diapason	Wood and metal	8 ft
3. Clarionet Diapason	Wood and metal	8 ft
4. Principal	Metal	4 ft
5. Harmonic Flute	Metal	4 ft
6. Orchestral Flute	Metal	4 ft
7. Piccolo	Metal	2 ft
8. Horn	Metal	8 ft
Swell organ		
9. Bourdon	Wood and Metal	16ft
10.Open Diapason	Wood and Metal	8 ft
11.Flute Diapason	Wood and Metal	8 ft
12.Principal	Metal	4 ft
13.Cornopean	Metal	8 ft
14.Oboe and Bassoon	Metal	8 ft
Pedal organ		
15.Sub Bass	Wood	16ft
16.Trombone	Metal	16 ft
Couplers		
17.Octave Swell	20.Unison Swell to great	
18.Super Swell to Great	21.Swell to Pedals	
19 Sub Swell to Great	22.Great to pedals	

Already in 1867, therefore, Bryceson Brothers had designed an organ that emulated the basis of the French romantic instrument.

---

210. Editorial in *The Musical Standard* 143 (27 April 1867), p. 26

5. Vienna Exhibition, 1873

Bryceson Brothers did not exhibit at this exhibition. I note it here as Weigle attempted a demonstration of a direct action electric organ.

6. International Inventions Exhibition, 1885

The most notable exhibition was the International Inventions Exhibition held in London during 1885. The official catalogue lists at least 40 manufacturers exhibiting organs and organ parts. In Division II, Music, Henry Willis & Sons had four exhibits: a patent organ, an electro-pneumatic action, a 'grand' blowing apparatus and an improved pneumatic lever. Bryceson Bros. put up a concert chamber organ of 24 speaking stops with a detached console some 40ft (12.2 m) away, patent pneumatic drawstop action, reciprocating batteries and automatic blowing gear for pressure and exhaust driven by a 'Bisschop' gas motor, designed and made in Germany. Separately, John Bryceson exhibited (Group III. Engineering, Construction and Architecture) a continuous blast fog horn for maritime use.[211]

The term 'reciprocating batteries' is quaint. Does this refer to the Barker patented system (or some similar idea) that was applied for automatically withdrawing the electrodes when the blowing ceased or was it a means of generating turbulence within the battery electrolyte? The matter is discussed further in Appendix V. The Bryceson patented pneumatic pallet must also have been used, as both pressure and exhaust wind were called for. Altogether, the four-clavier instrument, with its gas engine for the wind supply, was a 'state of the art' exhibit.

Willis had set his heart on winning a Gold medal, but it was Bryceson Brothers that carried it off. Perhaps the anecdote that Bryceson had advised Willis on the electric action for the Canterbury Cathedral organ originated somehow in connection with this rivalry.

---

211. Hopson, Jonathan, National Art Library, private communication, 19 September 2000

Some time after the Gold Medal exhibit had returned to the workshop, the Revd Septimus Pontifex purchased it for the new church of St Peter, Parkstone near Poole, commissioning it in 1888. The gas engine, perhaps because the church lacked a gas supply, was replaced by an hydraulic blowing apparatus.[212]

House pamphlets

From time to time, the firm published pamphlets and hand-outs as sales aids for distribution to potential clients. The first pamphlet to be noted is a price list for the various types of instruments available from Bryceson Brothers when it was based at Brook Street, Euston Road. A copy of the pamphlet was found, together other documentation, in the back of an organ sold in 1864 to the Anglican Church of St. John, Buenos Aires.[213] The address given on the price list is that of the Brook Street premises, so the date of its printing may be attributed to the period 1859 – 1864. [214]

Photographs of the price list (*vide* Figures 69 and70) suggest that it was printed on both sides of a foolscap sheet. It covers finger and barrel organs with one and two claviers and up to fourteen stops and larger instruments with an octave and a half, or two octaves of pedals. The largest organ with 'two rows of keys', a Swell to Pedals coupler and two composition pedals, cost £225. The firm offered German stops, e.g. the Rohr-Flöte and the Gedact in place of the Stopt Diapason, if preferred. At last, in this modest acknowledgement of German tastes, we see Bryceson's recognition of the impact of the Hill-Gauntlett revolution. The firm was also able to supply bellows operated by hydraulic apparatus, an early indication of Bryceson's approach to technical innovation.

Another interesting document found within the organ was the programme for a recital given by Frederick Archer on the occasion of the organ's completion in the Brook Street workshop. This was dated 23 February, 1864, *vide* figure 71.

---

212. The Organ of St. Peter's Parkstone , http://www.branksea.demon.co.uk/page4l.html

213. http://www.galeon.com/brycesonquilmes/aficiones695892.html

214. London trade directories for the period give the Brook Street address, *vide* Appendix VII

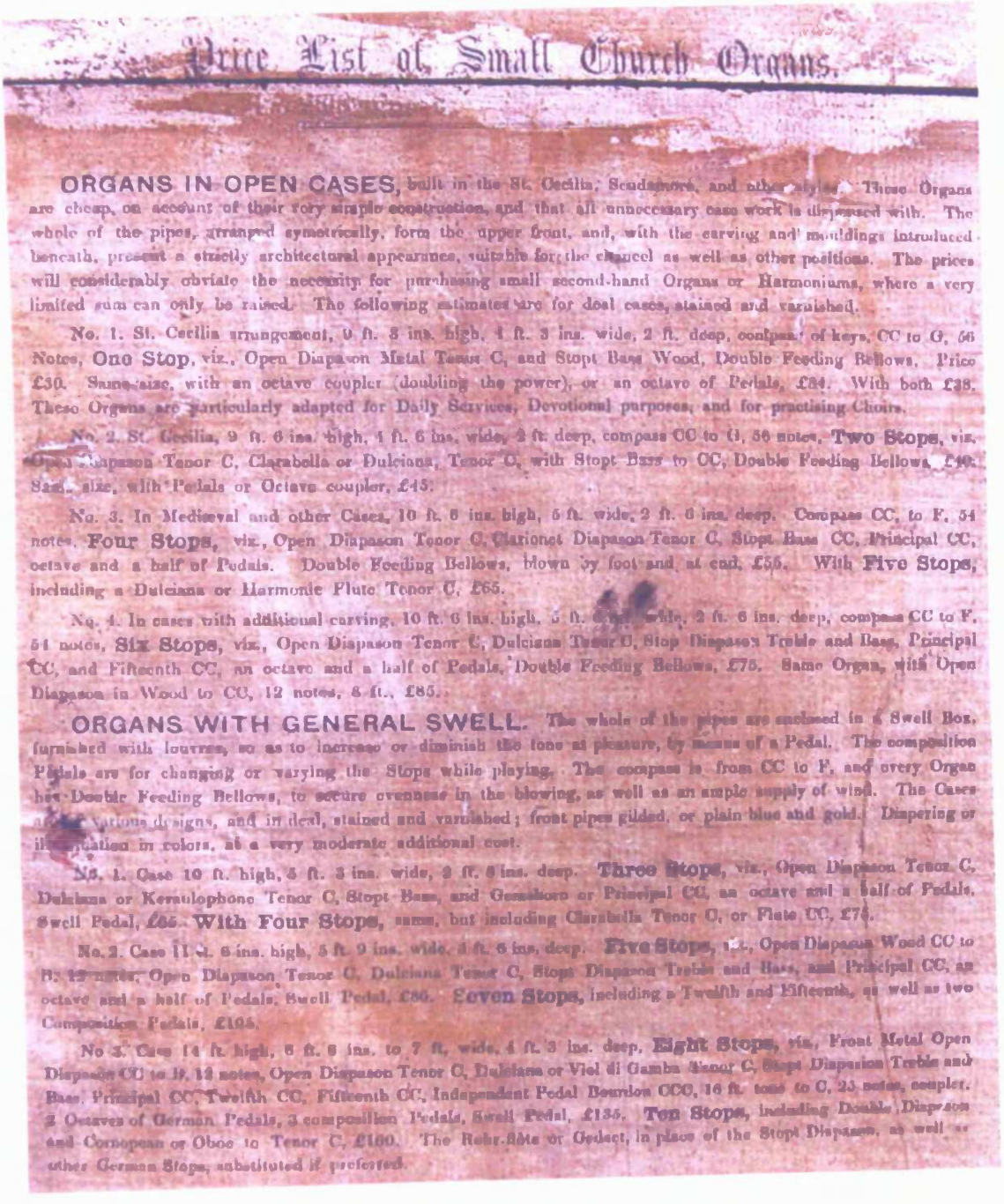

Price List of Small Church Organs.

ORGANS IN OPEN CASES, built in the St. Cecilia, Scudamore, and other styles. These Organs are cheap, on account of their very simple construction, and that all unnecessary case work is dispensed with. The whole of the pipes, arranged symetrically, form the upper front, and, with the carving and mouldings introduced beneath, present a strictly architectural appearance, suitable for the chancel as well as other positions. The prices will considerably obviate the necessity for purchasing small second-hand Organs or Harmoniums, where a very limited sum can only be raised. The following estimates are for deal cases, stained and varnished.

No. 1. St. Cecilia arrangement, 9 ft. 8 ins. high, 4 ft. 3 ins. wide, 2 ft. deep, compass of keys, CC to G, 56 Notes, **One Stop**, viz., Open Diapason Metal Tenor C, and Stopt Bass Wood, Double Feeding Bellows. Price £30. Same size, with an octave coupler (doubling the power), or an octave of Pedals, £34. With both £38. These Organs are particularly adapted for Daily Services, Devotional purposes, and for practising Choirs.

No. 2. St. Cecilia, 9 ft. 6 ins. high, 4 ft. 6 ins. wide, 2 ft. deep, compass CC to G, 56 notes, **Two Stops**, viz., Open Diapason Tenor C, Clarabella or Dulciana, Tenor C, with Stopt Bass to CC, Double Feeding Bellows, £40. Same size, with Pedals or Octave coupler, £45.

No. 3. In Mediæval and other Cases, 10 ft. 6 ins. high, 5 ft. wide, 2 ft. 6 ins. deep. Compass CC, to F, 54 notes. **Four Stops**, viz., Open Diapason Tenor C, Clarionet Diapason Tenor C, Stopt Bass CC, Principal CC, octave and a half of Pedals. Double Feeding Bellows, blown by foot and at end, £55. With **Five Stops**, including a Dulciana or Harmonic Flute Tenor C, £65.

No. 4. In cases with additional carving, 10 ft. 6 ins. high, 5 ft. 6 ins. wide, 2 ft. 6 ins. deep, compass CC to F, 54 notes, **Six Stops**, viz., Open Diapason Tenor C, Dulciana Tenor C, Stop Diapason Treble and Bass, Principal CC, and Fifteenth CC, an octave and a half of Pedals, Double Feeding Bellows, £75. Same Organ, with Open Diapason in Wood to CC, 12 notes, 8 ft., £85.

ORGANS WITH GENERAL SWELL. The whole of the pipes are enclosed in a Swell Box, furnished with louvres, so as to increase or diminish the tone at pleasure, by means of a Pedal. The composition Pedals are for changing or varying the Stops while playing. The compass is from CC to F, and every Organ has Double Feeding Bellows, to secure evenness in the blowing, as well as an ample supply of wind. The Cases in various designs, and in deal, stained and varnished; front pipes gilded, or plain blue and gold. Diapering or illumination in colors, at a very moderate additional cost.

No. 1. Case 10 ft. high, 5 ft. 3 ins. wide, 2 ft. 6 ins. deep. **Three Stops**, viz., Open Diapason Tenor C, Dulciana or Keraulophone Tenor C, Stopt Bass, and Gemshorn or Principal CC, an octave and a half of Pedals, Swell Pedal, £85. **With Four Stops**, same, but including Clarabella Tenor C, or Flute CC, £75.

No. 2. Case 11 ft. 6 ins. high, 5 ft. 9 ins. wide, 3 ft. 6 ins. deep. **Five Stops**, viz., Open Diapason Wood CC to B, 12 notes, Open Diapason Tenor C, Dulciana Tenor C, Stopt Diapason Treble and Bass, and Principal CC, an octave and a half of Pedals, Swell Pedal, £80. **Seven Stops**, including a Twelfth and Fifteenth, as well as two Composition Pedals, £105.

No. 3. Case 14 ft. high, 8 ft. 6 ins. to 7 ft. wide, 4 ft. 3 ins. deep. **Eight Stops**, viz., Front Metal Open Diapason CC to B, 12 notes, Open Diapason Tenor C, Dulciana or Viol di Gamba Tenor C, Stopt Diapason Treble and Bass, Principal CC, Twelfth CC, Fifteenth CC, Independant Pedal Bourdon CCC, 16 ft. tone to C, 25 notes, coupler, 2 Octaves of German Pedals, 3 composition Pedals, Swell Pedal, £135. **Ten Stops**, including Double Diapason and Cornopean or Oboe to Tenor C, £160. The Rohr-flöte or Gedact, in place of the Stopt Diapason, as well as other German Stops, substituted if preferred.

Figure 69 Henry Bryceson's Price list – front page
(source: www.galeon.com/brycesonqiilmes)

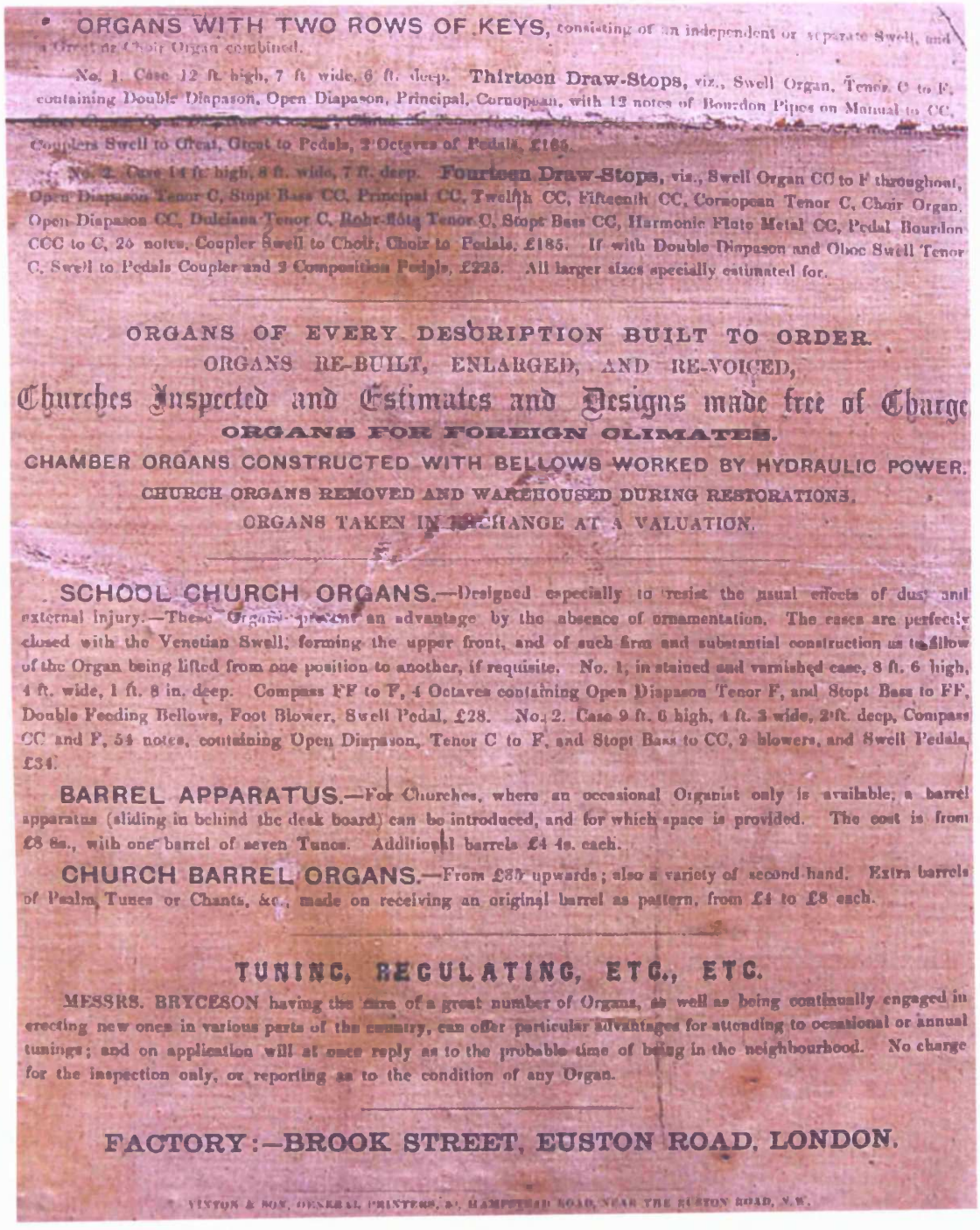

ORGANS WITH TWO ROWS OF KEYS, consisting of an independent or separate Swell, and a Great or Choir Organ combined.

No. 1. Case 12 ft. high, 7 ft. wide, 6 ft. deep. **Thirteen Draw-Stops**, viz., Swell Organ, Tenor C to F, containing Double Diapason, Open Diapason, Principal, Cornopean, with 12 notes of Bourdon Pipes on Manual to CC, Couplers Swell to Great, Great to Pedals, 2 Octaves of Pedals, £165.

No. 2. Case 14 ft. high, 8 ft. wide, 7 ft. deep. **Fourteen Draw-Stops**, viz., Swell Organ CC to F throughout, Open Diapason Tenor C, Stopt Bass CC, Principal CC, Twelfth CC, Fifteenth CC, Cornopean Tenor C, Choir Organ, Open Diapason CC, Dulciana Tenor C, Rohr-flöte Tenor C, Stopt Bass CC, Harmonic Flute Metal CC, Pedal Bourdon CCC to C, 25 notes, Coupler Swell to Choir, Choir to Pedals, £185. If with Double Diapason and Oboe Swell Tenor C, Swell to Pedals Coupler and 2 Composition Pedals, £225. All larger sizes specially estimated for.

ORGANS OF EVERY DESCRIPTION BUILT TO ORDER.

ORGANS RE-BUILT, ENLARGED, AND RE-VOICED,

Churches Inspected and Estimates and Designs made free of Charge

ORGANS FOR FOREIGN CLIMATES.

CHAMBER ORGANS CONSTRUCTED WITH BELLOWS WORKED BY HYDRAULIC POWER.

CHURCH ORGANS REMOVED AND WAREHOUSED DURING RESTORATIONS.

ORGANS TAKEN IN EXCHANGE AT A VALUATION.

SCHOOL CHURCH ORGANS.—Designed especially to resist the usual effects of dust and external injury.—These Organs present an advantage by the absence of ornamentation. The cases are perfectly closed with the Venetian Swell, forming the upper front, and of such firm and substantial construction as to allow of the Organ being lifted from one position to another, if requisite. No. 1, in stained and varnished case, 8 ft. 6 high, 4 ft. wide, 1 ft. 8 in. deep. Compass FF to F, 4 Octaves containing Open Diapason Tenor F, and Stopt Bass to FF, Double Feeding Bellows, Foot Blower, Swell Pedal, £28. No. 2. Case 9 ft. 6 high, 4 ft. 3 wide, 2 ft. deep, Compass CC and F, 54 notes, containing Open Diapason, Tenor C to F, and Stopt Bass to CC, 2 blowers, and Swell Pedals, £34.

BARREL APPARATUS.—For Churches, where an occasional Organist only is available, a barrel apparatus (sliding in behind the desk board) can be introduced, and for which space is provided. The cost is from £8 8s., with one barrel of seven Tunes. Additional barrels £4 4s. each.

CHURCH BARREL ORGANS.—From £80 upwards; also a variety of second-hand. Extra barrels of Psalm Tunes or Chants, &c., made on receiving an original barrel as pattern, from £4 to £8 each.

TUNING, REGULATING, ETC., ETC.

MESSRS. BRYCESON having the care of a great number of Organs, as well as being continually engaged in erecting new ones in various parts of the country, can offer particular advantages for attending to occasional or annual tunings; and on application will at once reply as to the probable time of being in the neighbourhood. No charge for the inspection only, or reporting as to the condition of any Organ.

FACTORY:—BROOK STREET, EUSTON ROAD, LONDON.

[illegible] & SON, GENERAL PRINTERS, 81, HAMPSTEAD ROAD, NEAR THE EUSTON ROAD, N.W.

Figure 70 Henry Bryceson's Price List – back page
(source: www.galeon.com/brycesonqiilmes)

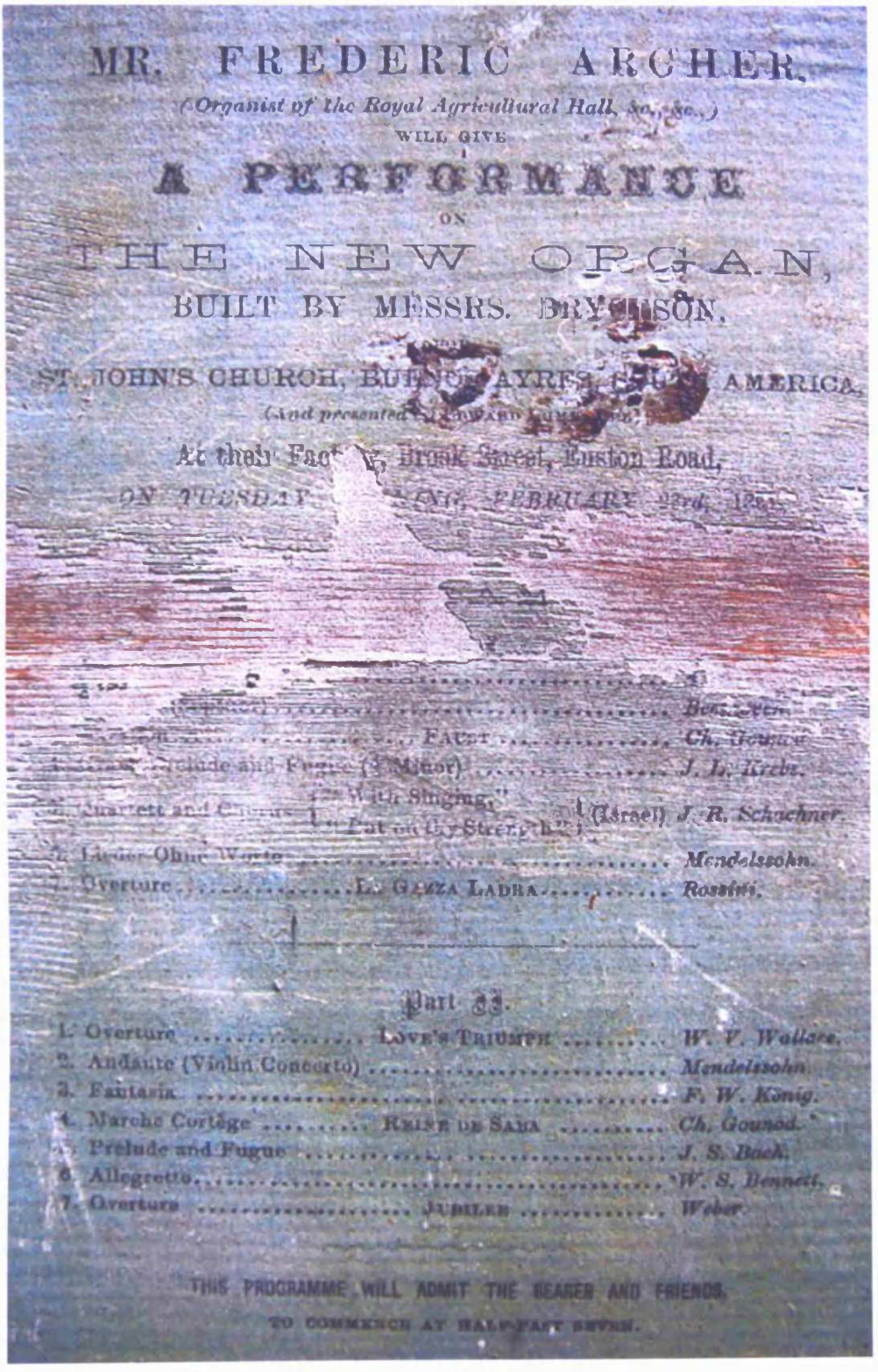

MR. FREDERIC ARCHER,

(Organist of the Royal Agricultural Hall, &c., &c.,)

WILL GIVE

A PERFORMANCE

ON

THE NEW ORGAN,

BUILT BY MESSRS. BRYCESON,

ST. JOHN'S CHURCH, BUENOS AYRES, SOUTH AMERICA,

(And presented [illegible])

At their Fac[illegible], Brook Street, Euston Road,

ON TUESDAY [illegible], FEBRUARY 23rd, 18[illegible]

[illegible] ..... Beethoven.

[illegible] ..... FAUST ..... Ch. Gounod.

[illegible] Prelude and Fugue (A Minor) ..... J. L. Krebs.

[illegible] Quartett and Chorus { "With Singing," / "Put on thy Strength" } (Israel) J. R. Schachner.

[illegible] Lieder Ohne Worte ..... Mendelssohn.

7. Overture ..... LA GAZZA LADRA ..... Rossini.

Part II.

1. Overture ..... LOVE'S TRIUMPH ..... W. V. Wallace.
2. Andante (Violin Concerto) ..... Mendelssohn.
3. Fantasia ..... F. W. König.
4. Marche Cortège ..... REINE DE SABA ..... Ch. Gounod.
5. Prelude and Fugue ..... J. S. Bach.
6. Allegretto ..... W. S. Bennett.
7. Overture ..... JUBILEE ..... Weber.

THIS PROGRAMME WILL ADMIT THE BEARER AND FRIENDS.

TO COMMENCE AT HALF-PAST SEVEN.

Figure 71 Programme for a recital on the St John's Church, Buenos Aires prior to its delivery
(source: www.galeon.com/brycesonqiilmes)

In 1876, Bryceson Brothers & Morten built a large organ for the Catholic Church of SS. Peter and Paul in Cork, Ireland and in the same year the firm published a pamphlet giving its specification.[215] By now we see that Bryceson was following the French romantic organ concept with the use of Barker rmachines, split pressure to the bass and tenor of the Great, Swell and Choir divisions, string stops in abundance, and no less than seven reeds out of a total of 38 speaking stops. The couplers and stop combinations operate by pedals only. The firm even used the French Diapason Normal pitch. It would be interesting to know whether the draw stop layout also followed the French style where the top draw stop rows do not rise above the top clavier level and are angled in for easy reach, *vide* Figure 72. It has to be said that this type of pamphlet, using a new and important instrument as a reference, is a convincing sales aid.

Six years later, Bryceson Brothers & Ellis completed a 'Grand Concert Organ' for the Geo. A. Clark Halls in Paisley, Scotland.[216] A somewhat larger organ than the Cork instrument, with 49 speaking stops, it nevertheless followed its example with a French flavour. Again, useful information is given in the pamphlet about the organ's specification, including a statement that the tuning is that of 'band pitch', its evenness maintained by heating coils within the organ and bellows chamber. The style of the pamphlet is very similar to that published for the Cork organ, *vide* Figure 73.

The pamphlet dated September 1894 puts Bryceson Brothers at 54, Essex Road, Islington Green. It is titled INVENTORS OF ELECTRIC ORGAN ACTION. Reference is made to the Gold Medal Award at the International Inventions Exhibition and to 'various International Prize Medals, dating from the First Great Exhibition, 1851'. Press cuttings from the Daily Chronicle and the Daily Telegraph are included, *vide* Figure 74.

215.The British Organ Archive, The Bryceson File

216. NPOR Survey N18193

GRAND ORGAN,

SS. Peter and Paul's Catholic Church, Cork, Ireland,

Built by BRYCESON BROTHERS & MORTEN, London, 1876.

In handsome carved Gothic case of mottled wood, 36 ft. high, 30 ft. wide, 12 ft. deep, with four towers of 16 ft. metal pipes. The whole frontage of pipes and woodwork richly illuminated in gold and colors.

The Pneumatic Lever Apparatus is applied to both Swell and Great Organs separately, as well as to Manual Couplers. Tubular pneumatic power is introduced in addition, so that a pallett is now placed beneath each large front pipe, instead of a conveyance being used for its supply of wind.

The Great Organ Reeds are on an increased pressure of wind and enclosed in the same box with the Swell Organ. Each Manual Sound-board is divided and supplied by two distinct reservoirs of its own for Treble and Bass. Pedal Sound-boards have two large reservoirs. There are three main bellows, with double feeders to each for filling reservoirs. Every draw-stop knob represents a sounding stop throughout, excepting Voix Celeste. Couplers act by blighting pedals only. Pitch, French *Diapason Normal*. Concave and radiating pedal-board. Drawstop knobs placed at an angle to performer.

	SWELL ORGAN CC to A.		Pipes.	Feet.
1	Double Diapason	Wood and Metal	58	16
2	Open Diapason	Wood and Metal	58	8
3	Viol de Gambe	Metal	58	8
4	Voix Célestes	Metal	46	8
5	Lieblich Gedeckt	Wood and Metal	58	8
6	Principal	Metal	58	4
7	Echo Flute	Metal	58	4
8	Harmonic Piccolo	Metal	58	2
9	Mixture, 3 ranks	Metal	174	
10	Cornopean	Metal	58	8
11	Oboe	Metal	58	8
12	Vox Humana	Metal	58	8
	Tremulant acting on Swell.		800	
	GREAT ORGAN CC to A.			
1	Double Open Diapason	Metal	58	16
2	Open Diapason	Metal	58	8
3	Open Flute	Wood and Metal	58	8
4	Viola	Metal	58	8
5	Stopped Diapason	Wood and Metal	58	8
6	Principal	Metal	58	4
7	Harmonic Flute	Metal	58	4
8	Flautina	Metal	58	2
9	Full Mixture, 4 ranks	Metal	232	
10	Double Trumpet	Metal	58	16
11	Trumpet	Metal	58	8
12	Clarion	Metal	58	4
			870	
	CHOIR ORGAN CC to A.			
1	Dulciana	Metal	58	8
2	Viol d'Amour	Metal	58	8
3	Rohr Flöte	Wood and Metal	56	8
4	Gemshorn	Metal	58	4
5	Lieblich Flöte	Metal	58	4
6	Flageolet	Metal	58	2
7	Clarionet and Bassoon	Metal	58	8
			398	
	PEDAL ORGAN CCC to F.			
1	Contra Bass	Wood	30	32
2	Open Diapason	Wood	30	16
3	Violone	Metal	30	16
4	Bourdon	Wood	30	16
5	Violoncello	Metal	30	8
6	Bass Flute	Wood	30	8
7	Trombone	Wood	30	16
			210	

	COUPLERS BY PEDALS.
1	Swell to Great.
2	Swell to Choir.
3	Sub Choir to Great
4	Great Reeds to Swell.
5	Swell to Pedals.
6	Great to Pedals.
7	Choir to Pedals.
8	Trombone on and off.
9	Swell Tremulant.

SUMMARY.	Stops.	Pipes.
Swell Organ	12	800
Great Organ	12	870
Choir Organ	7	398
Pedal Organ	7	210
Total Sounding Stops	38	2278

4 Combination Pedals to Great and Pedal Organs. 3 Combination Pedals to Swell Organ.

FACTORY—STANHOPE STREET, EUSTON ROAD, LONDON, 1876.

Figure 72 Bryceson Bros. & Morten pamphlet for the SS. Peter and Paul organ, Cork
(source: Bryceson file, BOA)

GRAND CONCERT ORGAN,

THE GEO. A. CLARK HALLS, PAISLEY, SCOTLAND.

Built by BRYCESON BROS. & ELLIS, London, 1882.

RICHLY carved Ionic case of fine Riga oak, 45 ft. high, 32 ft. wide, 15 ft. deep, supporting 234 front pipes, from CCCC 32 ft. 20 ins. in diameter, grouped in two massive towers and double tiers throughout.

The Pneumatic Lever Apparatus is applied to both Swell and Great Organs separately, also to Manual Couplers.

The drawstop action, eight combination pistons, and front pipe sound-boards are worked by tubular pneumatic transmission.

The Great Organ Harmonic Flutes and Reeds are placed on a separate sound-board, with increased pressure of wind, and enclosed in the same box with the *Swell Organ*. A special Coupler is provided for this arrangement, which reinforces the *Crescendo* materially. Drawstop knobs placed at an angle, concave radiating pedal-board, and 14 accessory pedals.

Two main bellows with horizontal feeders and hydraulic engines placed beneath orchestra, supplying wind through seven intermediate reservoirs for various pressures. The necessary temperature for tuning and maintaining *band pitch* is secured by the introduction of heating coils fixed within the organ and bellows chamber.

				Pipes.	Feet.
	SOLO ORGAN CC to C.				
1	Vox Angelica		Metal	61	8
2	Hohl Flöte		Wood and Metal	61	8
3	Orchestral Flute		Metal	61	4
4	Flautina		Metal	61	2
5	Tromba		Metal	61	8
6	Corno di Bassetto		Metal	61	8
				366	
	SWELL ORGAN CC to C.				
1	Double Diapason		Closed Wood and Metal	61	16
2	Open Diapason		Metal	61	8
3	Flauto Dolce		Wood and Metal	61	8
4	Salcional		Metal	61	8
5	Voix Célestes		Metal	49	8
6	Rohr Gedackt		Closed Wood and Metal	61	8
7	Principal		Metal	61	4
8	Flauto Traverso		Metal	61	4
9	Octavina		Metal	61	2
10	Mixture, 3 ranks		Metal	183	
11	Trumpet		Metal	61	8
12	Oboe		Metal	61	8
13	Vox Humana		Metal	61	8
	Tremulant acting on Swell.			903	
	GREAT ORGAN CC to C.				
1	Double Open Diapason		Metal	61	16
2	Great Open Diapason		Metal	61	8
3*	Harmonic Open Diapason		Wood and Metal	61	8
4	Small Open Diapason		Metal	61	8
5	Viola		Metal	61	8
6	Spitz Flöte		Metal	61	8
7	Rohr Flöte		Closed Wood and Metal	61	8
8	Principal		Metal	61	4
9*	Harmonic Flute		Metal	61	4
10*	Harmonic Piccolo		Metal	61	2
11	Full Mixture, 3 ranks		Metal	183	
12*	Double Trumpet		Metal	61	16
13*	Horn		Metal	61	8
14*	Clarion		Metal	61	4
	* On increased pressure enclosed in Swell Box.			976	
	CHOIR ORGAN CC to C.				
1	Dulciana		Metal	61	8
2	Keraulophon		Metal	61	8
3	Lieblich Gedackt		Closed Wood and Metal	61	8
4	Concert Flute		Metal	61	4
5	Flageolet		Metal	61	2
6	Contra Fagotto		Metal	61	16
7	Orchestral Oboe		Metal	61	8
8	Clarionet and Bassoon		Metal	61	8
	Spotted metal throughout Choir Organ.			458	
	PEDAL ORGAN CCC to F.				
1	Double Open Diapason		Metal	30	32
2	Open Diapason		Wood	30	16
3	Violone		Metal	30	16
4	Sub Bass		Closed Wood	30	16
5	Violoncello		Wood	30	8
6	Octave		Metal	30	8
7	Bass Flute		Closed Wood	30	8
8	Trombone		Metal	30	16
				240	

COUPLERS, &c.

1 Solo to Great.
2 Swell to Great.
3 Swell Octave itself.
4 Swell Sub Octave itself.
5 Swell to Choir.
6 Great Flutes and Reeds to Swell.
7 Solo to Pedals.
8 Swell to Pedals.
9 Great to Pedals.
10 Choir to Pedals.
11 Wind Signal.

ACCESSORY MOVEMENTS BY PEDALS.

4 Combinations to Swell Organ, also by Pistons.
4 Combinations to Great and Pedal Organs, also by Pistons.
1 Swell to Pedals, on and off.
1 Great to Pedals, on and off.
1 Great to Swell, on and off.
1 Choir Echo Effect.
1 Swell Tremulant.
1 Swell Pedal.

Figure 73 Bryceson Bros. & Ellis pamphlet for the organ in Paisley town hall
(source: Bryceson file, BOA)

Removed from Charlton Works, N.

BRYCESON BROTHERS,

ORGAN BUILDERS,

54, ESSEX ROAD, ISLINGTON GREEN,

LONDON, N.

INVENTORS OF ELECTRIC ORGAN ACTION,

Tubular Pneumatic drawstop & pedal action. Patents from 1868

The GOLD MEDAL Award, International Inventions' Exhibition, 1885, for "Application and Development of ELECTRIC ACTION as adapted to Organ Mechanism." Also various International Prize Medals, dating from the First Great Exhibition, 1851.

Organ Builders to Royal Italian Opera, Her Majesty's Opera, Lyceum Theatre, Royal Academy of Music, St. James's Hall, Paisley Public Halls, Scotland, St. Andrew's Hall, Norwich, Penzance Town Hall, Rugby Public Schools, U. P. Church, Morningside Edinburgh, SS. Peter and Paul's Catholic Church, Cork, etc., etc.

The Albert Palace.—"The great Organ, concerning which, so much anxiety is felt, is described as having been built in 1872 by Messrs. Bryceson. It weighs eighty-seven tons, has about sixty stops, and 4,209 pipes at the performer's command. When built it was said to rival in grandeur and sweetness of tone the celebrated organs of Haarlem and Freiburg."—*Daily Chronicle, Aug.* 8, 1893.

"Altogether, this instrument is one of the finest in Europe." —*Daily Telegraph, Aug.* 25, 1893.

Note.—This organ is now removed to St. Benedict's Monastery, Fort Augustus, Scotland, and being adapted to the requirements of the vast Abbey (in course of erection) which is over 300 feet long and includes 14 Chapels, etc., etc.

"The Pro-Cathedral at Kensington, rejoices however, in an organ of peculiar sweetness and variety, its *vox humana* stop being reputed the best, or, at all events, the second best in the world. Often, while Mr. Edward Lane was playing his voluntaries, a furtive glance might be caught turning towards the tribune, in the half expectation of detecting the presence of choristers."—*Daily Telegraph, Feb.* 15, 1878.

Established 1796.

September, 1894.

Figure 74 Bryceson Bros. Pamphlet of 1894
(Source: Nicholas Thistlethwaite)

Another leaflet carries, for the first time, a depiction of the 1885 Gold Medal and the words 'established 100 Years' alongside the name Bryceson Brothers, *vide* Figure 75. Again, this fragment appears to be the first side, as no address is given. It must have been published in 1896, or shortly thereafter, as the centenary is recognised.

There is a two-page pamphlet published (Figure 76) when Bryceson Brothers had its workshop, according to the overprinting, in St. Thomas's Hall, Gillespie Road, Highbury.[217] This dates its publication at between 1906 and 1909, but the heading of the pamphlet reads 'Century to Century 1796-1901', so we may assume that 1901 is the earliest publication date and that the pamphlet was still being distributed in 1906. The text is taken from an as yet unidentified article from a trade journal that included references to the work of companies which 'saw the dawn of the nineteenth century and live on into its successor. '

The text has an extract from another article published in *The British Trade Journal* that extols Bryceson Bros.[218] 'As a famous organ-building firm, which has constructed some of the principal instruments now in existence', including the original organ for the Albert Palace, Battersea, and makes mention of the Gold medal awarded to the Bryceson Brothers for its electric action. It also suggests that the firm received a Prize Medal at the Great Exhibition of 1851. There are also extracts from press cuttings from the *Daily Telegraph* about the Albert Palace and Pro-Cathedral, Kensington organs.

---

217. Copy of a document kindly provided by Nicholas Thistlethwaite, 2002

218. The British Organ Archive, the Bryceson File

Gold Medal 1885.

BRYCESON BROTHERS.

ORGANS,

Chamber or Concert Hall.

Established 100 Years.

1. The rapid modern development of Electric Installations and reliable Gas, Water or Electric Motors for blowing power, as well as the introduction of Tubular-pneumatic and Electric transmission, now admit of the successful distribution or separation of an organ into distinct blocks, so that valuable space in a chamber or hall is much economized, besides many other novel advantages gained.

2. A practical survey of any assigned position in order to fully utilize existing conditions, or suggest structural alterations for the better accommodation of an organ, is really the primary step to be taken before any precise list of "Stops" (often misnamed *a specification*) is attempted, which might otherwise lead to the crowding in of undesirable quantity, instead of a selection governed by available space. Therefore no general illustrated or price list can be made serviceable where there is such a range of circumstances and individual taste concerned in what should result in producing a successful work of art, possibly constructed for the one occasion only, and certainly never multiplied by numbers.

3. The first Electric Organ in England was built by Bryceson Brothers, for Her Majesty's Opera, and publicly inaugurated with the keyboards placed in the orchestra, May 15, 1868. This system was introduced through a concession from Mr. Barker, organ builder, Paris, but forthwith perfected and adapted to English requirements, in successive patents taken out by ourselves, and applied to many well-known organs since. Therefore, tested by years of ordinary usage (see Dr. Hopkins' comprehensive standard volume, "*The Organ*," or "Organs and Organ Building," by Mr. C. A. Edwards.)

4. The above "revolution in the construction of the Royal Instrument," alluded to in the *Musical World* of July 18th, 1868, quickly led us and others to experiment with Tubular-pneumatic transmission (also a foreign invention of the same period), which has now become most useful and reliable to supersede mechanical drawstops and pedal actions, but is not desirable for the manuals, when applied *direct*, in an inexpensive form—compound-pneumatic or electric key action being best of all, unquestionably, for large organs especially.

5. In 1875, Mr. N. J. Holmes' great organ of 4 manuals, 65 sounding stops, and carillon of 61 bells, the largest and best known instrument ever built for a private residence, was erected. Afterwards it was removed to the Albert Palace, Battersea; on the closing of same purchased by Mr. John Burns, M.P., but the building having to be demolished, a re-sale took place, and this organ is now at St. Benedict's Monastery, Fort Augustus, N.B., awaiting the completion of the vast Abbey.

6. At the International Inventions Exhibition, 1885, BRYCESON BROTHERS were awarded the *GOLD MEDAL* for "Application and Development of Electric Action, as adapted to Organ Mechanism;" also various Prize Medals have been gained at intervals dating from the First Great Exhibition, 1851.

7. Organ Builders to Royal Italian Opera, Her Majesty's Opera, Lyceum Theatre, Royal Academy of Music, St. James's Hall; Paisley Public Hall, Scotland; St. Andrew's Hall, Norwich; Penzance Town Hall, Rugby Public Schools; U. P. Church, Morningside, Edinburgh; SS. Peter and Paul's Catholic Church, Cork; Pro-Cathedral, Kensington; St. Peter's, Parkstone, etc., etc.

Figure 75 Bryceson Bros. front page of a pamphlet of 1896
(source: Bryceson file, BOA)

BRYCESON BROS.
REMOVED TO

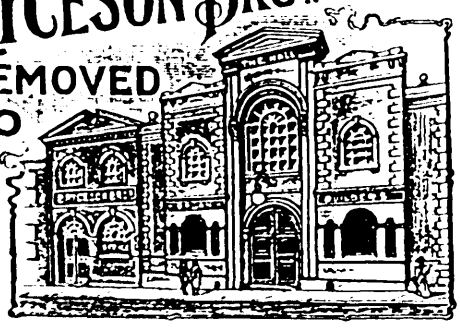

From

Century to Century,

1796 to 1901.

Bryceson Brothers' Organs.

TO COMMEMORATE the "Royal Record Reign" of England's noblest Queen, a movement is finding favour in many churches to erect new up-to-date organs of the most costly character. Now, as many mistakes are made in the choice of organ builders, church committees cannot give too great attention to the principle and character of organ building. "Life is short, but Art is long," is a maxim which strictly applies to architecture and music, and alike to church and organ building. We have been passing through a time of great progress in the arts, which contribute to the pleasures of life. It is certainly not to be regretted, that a portion of the spirit of the age has expended itself in the restoration of so many old gems of church architecture, and in the building of so many new places of worship. This is an activity from which the religion of future generations may benefit from a state of prosperity and renaissance, which may not be lasting, or, at least, continuous and progressive. But the degree of benefit to be derived, as well as the honour to be reflected back on the present generation, will depend entirely on the art and skill with which ecclesiastical structures have been erected.

The church organ, in its best form, undoubtedly is costly, though not so costly as it often is, and may be in worst form, but where it is genuine and thoroughly adapted to building, it is permanent in its utility almost as the fabric itself The best church organs in this country and on the Continent are hundreds of years old The reason of this probably is, that they were made in a time when organ building was in few hands, and the whole art was thoroughly understood, and was pursued, not for money-making only, but in the true love of the art for its own sake. The evil of the present time, is that there has been a sudden pell-mell demand with a pell-mell supply, so committees or subscribers to church organs have been able only to follow the crudest ideas of the qualities which constitute excellence. That the real value of an organ is in proportion to its magnitude, or the imposing number of its stops, is one of the most common gauges of merit. Nothing can be more untrue. The biggest and costliest organ may be the most unsatisfactory instrument possible; while too small an instrument may prove weak, and be worse than lost in a bad position or wrongly-constructed building. The true artistic purpose of a church organ is to lead and control congregational singing, accompany a choir, or give forth agreeable music when manipulated by a skilful organist.

One of the most distinguished firms of organ builders in England is Bryceson Brothers, who for a century, have held a high position for the superiority of their instruments. What has given this firm such a "Record Reign" is that the principals (Henry and John Bryceson) have made a scientific study of this important branch of the musical art, and from their having proceeded on the lines of the best schools of manufacture, by which they have brought their instruments to a high state of perfection. The superiority of this firm's organs consist in:—(1), great purity of tone; (2), simplicity of mechanism; (3), in unsurpassed workmanship; (4), best suitable material. It is the combination of these qualities that makes their instruments incomparable for either churches, colleges, concert halls, or chamber organs. Hence it is not to be wondered at, that they should receive much unqualified approval from eminent organists and others, whose high professional skill places their testimonies beyond all doubt.

Our space will not allow us to go into any detail of Bryceson Brothers' principles of organ building, nor do we think it necessary. It is more to the point, in these remarks, to refer generally to the firm's instruments from the testimony of clergymen and organists, which is of greater importance to those who require organs than to give a scientific essay on the internal manufacture of their various parts. As this is an age

Figure 76 Bryceson Bros. two page pamphlet circa. 1901
(source: Bryceson file, BOA)

of church building, when churches are springing up everywhere, it is of weighty importance to know where to go for an instrument that shall not only adorn the edifice, but which will give the utmost satisfaction to those who play, and those who listen to its music. In choosing this firm's organs, there need be no fear of their giving satisfaction, both as regards their superiority and economy of cost, and as "Memorial Organs," either to commemorate the Queen's Record Reign, or for any other commemoration, they should be of the "First Type" of instrument, and no saving of cost should be considered to make it worthy of the object for which it is built. We may mention that, among other magnificent organs which Bryceson Brothers have built, was the "Albert Palace Organ," now at St. Benedict's Abbey, and that they obtained the gold medal of the Inventions Exhibition, 1885, for electric organ action. As the firm was established in 1796, that is their Centenary Jubilee, which was accentuated by their acquirement and removal to a spacious hall and adjoining premises situated in Church Street, Islington.—*Christian Union Summer Number, 1897.*

The following record of some of the British firms who saw the dawn of the nineteenth century and live on into its successor, will be of particular interest. They have passed through a century which is unique in history—the age of marvellous mechanical progress and new processes, inventions and material—a century which has witnessed far-reaching changes in every industry. It speaks well for the facility of adaptation possessed by British manufacturers that so many of them should have lived through what must often have been times of stress and anxiety, when around them other firms were submerged. Those in the following lists and notices have our hearty congratulations on the skill and perseverance and indomitable energy with which they have steered their enterprise through the century, adapting themselves to changes and assimilating new ideas such as no previous period of the world's history has seen. . . . .

1796.—Messrs. Bryceson Bros., Organ Builders, The Hall, Church Street, Islington Green, London, N.

A famous organ-building firm, which has constructed some of the principal instruments now in existence. The original organ for the Albert Palace, Battersea, was built by Messrs Bryceson, and is now at St. Benedict's Monastery, Fort Augustus, Scotland, awaiting the completion of the vast abbey adjoining. The firm have made an electric organ action successfully since 1868; and at the International Inventions Exhibition, 1885, they were awarded the gold medal for the application and development of electric action as adapted to organ mechanism. But this is but one of the numerous improvements in organ construction introduced by them; while their prize medals date from the first great Exhibition of 1851. It must also be recorded that father and sons have been in direct control for over a century as practical heads of a manufacturing business.—*The British Trade Journal, Century Number, January 1st, 1901.*

The Albert Palace.

"The great Organ, concerning which, so much anxiety is felt, is described as having been built in 1872 by Messrs. Bryceson. It weighs eighty-seven tons, has about sixty stops, and 4,209 pipes at the performer's command. When built it was said to rival in grandeur and sweetness of tone the celebrated organs of Haarlem and Freiburg."—*Daily Chronicle, Aug. 8, 1893.*

"Altogether this instrument is one of the finest in Europe."—*Daily Telegraph, Aug. 25, 1893.*

"The Pro-Cathedral at Kensington rejoices however, in an organ of peculiar sweetness and variety, its *vox humana* stop being reputed the best, or at all events the second best in the world. Often, while Mr. Edward Lane was playing his voluntaries, a furtive glance might be caught turning towards the tribune, in the half expectation of detecting the presence of choristers."—*Daily Telegraph, Feb. 15, 1878.*

BRYCESON BROTHERS

CHURCH ORGANS.

CONCERT HALL ORGANS.

CHAMBER ORGANS.

~~The Hall, Church Street, Islington Green~~, London, N.

BRYCESON BROTHERS.
ST. THOMAS'S HALL,
GILLESPIE RD., HIGHBURY, N.

Advertisements

Newspapers as a vehicle for advertising were employed by organ-builders and instrument-makers in the eighteenth century. John Crang Hancock advertised his grant of Letters Patent from The King for his pianoforte action with 'spring key touch and Harp and Flute stops', together with prices ranging from 25 to 100 guineas, depending on size, in *The Kentish Gazette* of 20 July 1790. Not long afterwards, he took space in *The Observer* for 4 December 1791 for a similar advertisement, but with lower prices; the range had been reduced to 20 to 80 guineas. These were simple statements, much in the style of classified advertisements seen in local newspapers today.

Otherwise, Trade Directories were a cheap form of advertising a trade, address and little more, with the need for the person looking for an instrument to be pro-active. There were several Directories for London with others slowly starting up in the larger towns and cities. The musical trade journals did not begin to appear until the 1850s with the long-lived *The Musical Standard* and towards the end of the century, *Musical Opinion* (which is still being published today). Apart from *The Musical Times* there were many short-lived journals of which *Musical World, The Organist and Choirmaster, The Choir, and The orchestra* are examples.

We have already seen that Henry Bryceson had a trade advertisement associated with his exhibit in the Great Exhibition of 1851. In 1860, Messrs Bryceson & Fincham took a classified advertisement to acquaint the readership of *The Musical Times* that it had for sale a two clavier organ presently in the Congregational Church of St. John's Wood Terrace. [219] So far, I found no further advertisements until 1896, when a space was taken for a series of one tenth-page advertisements in *Musical Opinion* and *The Organist and Choirmaster* until around 1900. Examples are shewn in Figures 77 and 78.

---

219. Advertisement in *The Musical Times* 212 (October 1860), p. 357

Organ Builders

OF THE

UNITED KINGDOM.

For Terms to be inserted in this List, apply—Advertising Manager, 9, Berners St., W.

LONDON.

W. Hill & Sons, York Road Organ Works, Camden Road, N. (*See Advt.*).

H. Willis & Sons, 67, Rochester Place, Camden Town, N.W.

J. W. Walker & Sons. By Special Appointment to H.R.H. the Prince of Wales. 27, Francis Street, Tottenham Court Road, W.C.

Lewis & Co., Ltd., 234, Ferndale Road, Brixton, S.W.

Gray & Davison, 6, Pratt Street, Camden Town, N.W. (*See Advt.*).

Alfred Monk, Organ Works, 550, Holloway Road, N.

Bryceson Bros., The Hall, Church Street, Islington Green, N. (*See Advt.*).

Richard Heslop, Organ Builder, 16, Burma Road, N.

Norman & Beard, 46, Queen Victoria Street; and at St. Stephen's, Norwich. (*See Advt.*).

W. R. Andrew, 15, High Road, Kilburn. (*See Advt.*).

A. Kirkland, 113, Cottenham Road, Upper Holloway, N.; and Old Town Hall, Wakefield. (*See Advt.*)

Bevington & Sons, Manette Street, (late Rose Street) Charing Cross Road, London, W. (*See Advt.*)

A. Hunter & Son, 65a, High Street, Clapham, S.W. A speciality of Tubular Organs with their patent tubular pneumatic Coupling Chamber applied.

BATH.

Griffen & Stroud, Organ Builders, Walcott, Bath.

BRIGHTON.

Harper Bros., County Organ Builders, 36, Ship Street, Brighton. Organ Builders to the Mayor and Corporation; The Aquarium. Specifications, (New Organs, Enlargements, Rebuilds), free.

BRISTOL.

W. G. Yowles, 3, St. James Square. The oldest Organ Factory west of London. Established 1814.

CAMBRIDGE.

Bedwell & Son, The Cambridge Organ Works. Tubular, Electric, and Tracker Actions. Testimonials free.

DEAL.

F. H. Browne, Kent Organ Works, Deal. (*See Advt.*).

DURHAM.

Harrison & Harrison, Durham. Established 1861. Builders of over 1100 Organs in the British Isles and the Colonies. Prize Medal Edinburgh, 1890.

PLYMOUTH.

Hele & Co., Plymouth and Exeter. (*See Advt.*).

LEEDS.

J. J. Binns, Bramley Organ Works, Leeds. (*See Advt.*).

Abbott & Smith, Organ Builders. (*See Advt.*).

MANCHESTER.

W. E. Richardson & Sons, (from London). Makers to Her Majesty of superior Organs, "Student," Church, Chapel. Several for Sale. Central Organ Works, Hulme, and at Preston.

Wadsworth & Bros., 35, Oxford Street; and at 181, Union Street, Aberdeen.

SUNDERLAND.

H. S. Vincent & Co., Organ Builders. A speciality made of Tubular Pneumatic actions and Artistic Voicing.

WALSALL.

Nicholson & Lord, Organ Builders, Walsall. Specifications and Estimates for New Organs sent free. A Speciality made of Tubular Pneumatic Organs.

Figure 77 Bryceson Bros. entry in the *The Organist and Choirmaster*
(source: *The Organist and Choirmaster* 48 (15 April 1897), p. v)

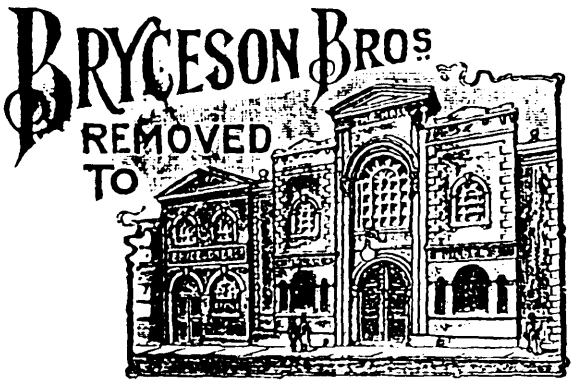

ORGAN BUILDERS.

Gold Medal at the International Inventions Exhibition, 1885, for application and development of **Electric Action.** ESTABLISHED, 1796.

THE HALL,

CHURCH STREET, ISLINGTON GREEN, LONDON, N

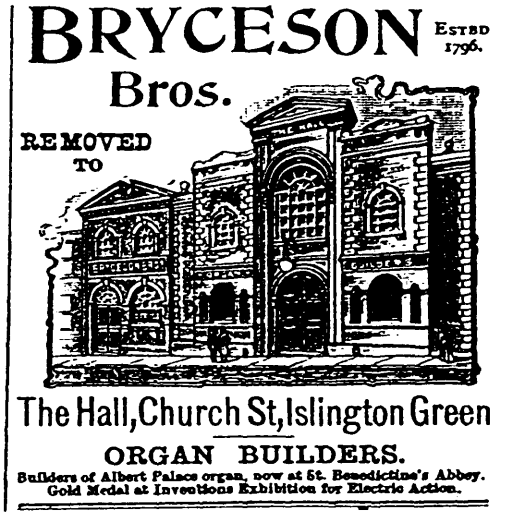

Figure 78 Bryceson Bros. advertisements in *The Organist and Choirmaster*
(sources: *The Organist and Choirmaster* 48 (15 April 1897), p. ii, and 229 (1 October 1896), p. 49)

It was usual around the turn of the nineteenth century for books to carry advertising as a means of defraying production costs. Advertisements were generally placed at the book's end. An early example is C. A. Edward's book *Organs and Organ Building* of 1881 that had six advertisements, none of them related to organs or organ-building.[220] *Organ Construction* by J. W. Hinton had four pages,[221] whilst Wedgewoods's *Dictionary of Organ Stops* contained no less than sixteen advertisement pages.[222] This is an area of sales promotion that the Bryceson firm does not appear to have employed. The firm probably thought that such limited circulation books had little chance of reaching those actually responsible for buying decisions.

---

220. Edwards, C. A., *Organs and Organ Building*

221. Hinton, J. W., *Story of the Electric Organ*

222. Wedgewood, J. I., *Dictionary of Organ Stops* (London: Vincent music Co., 1907)

4.8 Some important instruments

Here follow reviews of five large 'state of the art' instruments of three and four claviers built by the Bryceson firm during the period 1865-1885.

4.8.1 Electric action organs

Rugby School chapel -1872

The International Inventions Exhibition - 1885

4.8.2 Traditional organs

Great Concert Hall, Brighton - 1867

The Pro-Cathedral, Kensington -1870

The chamber organ of 1875, for the residence of N.J. Holmes Esq. – 1875

4.8.1 Electric action organs

Altogether, the firm built ten electric organs over the period 1868-1888. Only the 1888 organ in the church of St. Peter, Parkstone retained its original action, and this only up to 1915. Although much of the original pipework of some organs still exists, no archaeology of the organ actions has yet been identified. The most important and largest organ was that for Rugby School Chapel, whilst the last, St Peter's Parkstone, was originally the concert organ built for the International Inventions Exhibition of 1885.

Rugby School Chapel

By 1867, the chapel, originally built in 1820 and enlarged between 1848 and 1855 was too small to accommodate the entire school, so a decision was taken to rebuild the chapel again, using as much of the old building as possible. The chosen architect was William Butterfield (1814-1900), and his High Victorian style alterations were completed and the chapel consecrated in 1872.[223] The first two manual clavier organ was put in by Elliot in 1821, and in 1855, it was enlarged by Hill with a Choir division and moved to the north wall of the Chancel.[224] This instrument was by no means suitable for the rebuilt chapel and so the school authorities commissioned Bryceson Brothers to build a grand new organ. Funding for the organ was to be the joint and equal responsibility of the School and the Old Rugbeians.[225] Accordingly, an organ fund was set up in February 1871 and the subscriptions routinely recorded in the school magazine, *The Meteor*. It was soon clear that there would not be sufficient funding to cover the original agreed specification, so Bryceson Brothers were unable to complete the instrument before its installation in 1872. There was, though, enough of the pipework in place for the organ to be opened by Edwin Edwards, the school organist, for Chapel Service on the afternoon of Sunday 15 December 1872. The piece played before the service was 'the pretty and well known "Waft her, Angels".[226]

223. *Chapel* http://www.rugbyschool.net/history/chapel_guide.htm

224. Bradby, H. C., *Rugby* (London: George Bell and Sons, 1900), p. 120. Batigan D. Verne, 'The Organ of Rugby School Chapel', *The Organ* 126 (1952), p. 69 suggests *c.* 1823.

225. 'The organ Fund', *The Meteor* (30 October 1873), p. 189

226. 'Opening of the New Organ', *The Meteor* (19 December 1872), p.100

Edwin Edwards[227] devised the original specification in concert with Bryceson Brothers. It was a substantial instrument of four manual claviers with 50 speaking stops, 2820 pipes (when complete) and a full range of couplers and ventils.[228] Its location was (and is) on the North wall of the nave of the chapel, with the console placed on the Decani side below the pulpit, some 40 feet (12.2 m) from the body of the instrument.[229] This being so, the firm recommended the use of Barker's electric action as the only way to achieve a light touch and prompt action. Smith (a master at the school in 1872) tells us that Bryceson Brothers also introduced its patented (1868) pneumatic pallet.[230] The drawstop action employed was Bryceson's pneumatic system (patents of 1868 and 1869), whilst the swell and echo organ shutters were operated hydraulically with water as the fluid, in accord with Bryceson's patent of 1869.

Wind was supplied by two main reservoirs with conventional feeders for manual blowing, although provision was made for the installation of vertical feeders and two hydraulic engines at a later time. Each soundboard had a dedicated reservoir, the wind pressure being 2 in (51 mm) for the Echo division, rising to 6 in (152 mm) for the Solo division. There was also an exhaust reservoir at sub-atmospheric pressure for the operation of the soundboard pallets.

The pallet action was powered by one of two bichromate batteries located in the organ chamber. A drawstop at the console enabled the player to select the freshest battery.[231] Barker's brilliant but simple technique for the automatic

---

227. Edwards was appointed Music Master, Organist and Choirmaster in 1867. He left in 1886.

228. 'Organ News', *The Musical Standard* 421 (24 August 1872), pp. 14-5

229. Bradby, H.C., *Rugby*, (London: Bell and Sons), p. 121

230. Smith, C. J. E. Report on a Lecture to Rugby School Natural History Society, *The Meteor* (1 December 1872), p.31-3

231. Walrond, T. H. H., Prize Essay for 1891: 'On the Organs near Rugby', *Report of The Rugby School Natural History Society for 1891* (Rugby: A. J. Lawrence, 1892), p. 17. This is an outstanding contribution to the history and specifications of organs in and around Rugby in the late 1880s.

withdrawal of the electrodes from the jars when blowing stops (in order to conserve the zinc and electrolyte) is confirmed. Smith recorded that the battery plates 'are let into the acid by the action of the exhaust bellows'.

The original stop specification, published in *The Musical Standard* on 24 August 1872, is shown in Figure 80. Bryceson Brothers were able to use three stops from the previous Elliott-Hill organ, including the decorated case pipes that were used to make up the new Great Double Diapason rank.[232] At the organ's opening, all the pipe-work for the solo division and that of several stops from the other divisions remained to be installed. In June 1881, two manual clavier ranks, along with a large pedal stop that covered an ugly gap on the west front of the organ were introduced. But in June 1884, *The Meteor* reported that out of the original specification of 50 speaking stops, sixteen were still to be fitted, and this after three stops had already been added in 21 June 1881.[233] We may presume therefore that the complement of speaking stops at the December 1872 was only 31. The number of missing stops from each clavier as at 1884 was:

Division	**Specification**	**In place**
Choir	10	9
Great	10	10
Swell	15	10
Solo	5	*none*
Pedal	10	5

The electric action was not entirely successful. Walrond recorded that the pedal clavier electromagnets 'had to be so large that there was too great an amount of power taken from the battery', so Edwin Edwards paid £100 (probably to Bryceson Brothers) for converting the action to a pneumatic system.[234]

---

232. Bradby, H. C., *Rugby* (London: George Bell and Sons, 1900), p. 121

233. *The Meteor*, (21 June 1884), p. 74

234. Walrond, T. H. H., Prize Essay for 1891,'On the Organs near Rugby', *Report of The Rugby School Natural History Society for 1891* (Rugby: A. J. Lawrence, 1892), p.1

FOURTH MANUAL: SOLO ORGAN.

Compass, CC—g³, 56 notes.

1.	German Gamba	metal	8	feet.
2.	Harmonic Diapason	wood and metal	8	„
3.	Harmonic Flute	metal	4	„
4.	Corno di Bassetto	metal	8	„
5.	Tuba	metal	8	„

THIRD MANUAL: SWELL ORGAN.

Compass, CC—g³, 56 notes.

1.	Bourdon and Double Dulciana	wood and metal	16	„
2.	Open Diapason	metal	8	„
3.	Keraulophon	metal	8	„
4.	Flute	wood and metal	8	„
5.	Lieblich Gedackt	wood and metal	8	„
6.	Principal	metal	4	„
7.	Harmonic Flute	metal	4	„
8.	Fifteenth	metal	2	„
9.	Cornet	metal	3	ranks.
10.	Cymbal	metal	2	„
11.	Double Trumpet	metal	16	feet.
12.	Cornopean	metal	8	„
13.	Oboe	metal	8	„
14.	Vox Humana	metal	8	„
15.	Clarion	metal	4	„

SECOND MANUAL: GREAT ORGAN.

Compass, CC—g³, 56 notes.

1.	Double Open Diapason	zinc and metal	16	„
2.	Open Diapason	metal	8	„
3.	Salicional	metal	8	„
4.	Rohr Flöte	wood and metal	8	„
5.	Principal	metal	4	„
6.	Octave Gamba	metal	4	„
7.	Twelfth	metal	3	„
8.	Fifteenth	metal	2	„
9.	Full Mixture	metal	3	ranks.
0.	Posaune	metal	8	feet.

FIRST MANUAL: CHOIR ORGAN.

Compass, CC—g³, 56 notes.

1.	Violin Diapason	metal	8	„
2.	Cone Gamba	metal	8	„
3.	Lieblich Gedackt	wood and metal	8	„
4.	Spitz Flöte	metal	4	„
5.	Clarinet	metal	8	„

Echo in separate Swell Box.

6.	Echo Dulciana	metal	8	„
7.	Voix Celeste	wood and metal	8	„
8.	Hohl Flote	metal	4	„
9.	Gemshorn	metal	2	„
10.	Euphone	metal	8	„

PEDAL ORGAN.

Compass, CCC—f, 30 notes.

1.	Double Open Diapason	wood	32	„
2.	Open Diapason	wood	16	„
3.	Violone	metal	16	„
4.	Bourdon	wood	16	„
5.	Violoncello	metal	8	„
6.	Bass Flute	wood	8	„
7.	Twelfth	metal	6	„
8.	Fifteenth	metal	4	„
9.	Trombone	wood	16	„
10.	Bassoon	metal	16	„

SUMMARY.

	Stops.	Pipes.
Solo Organ	5	280
Swell	15	1008
Great	10	672
Choir	10	560
Pedal	10	300
	50	2820

COUPLER.

1. Solo to Swell.
2. Solo to Great.
3. Octave Swell on itself.
4. Sub-octave Swell on itself.
5. Swell to Great.
6. Swell to Choir.
7. Solo to Pedal.
8. Swell to Pedal.
9. Great to Pedal,
10. Choir to Pedal.

ACCESSORY MOVEMENTS.

1. Tremulant to Swell.
2. Tremulant to Choir.
3. Pedal acting on either Tremulant.
4. Combination Pedals to Great and Pedal Organs.
5. Combination Pedals to Great and Pedal Organs.
6. Combination Pedals to Great and Pedal Organs.
7. Combination Pedals to Great and Pedal Organs.
8. Combination Pedals to Swell Organ.
9. Combination Pedals to Swell Organ.
10. Combination Pedals to Swell Organ.
11. Swell to Great on and off by Pedal.
12. Great to Pedals on and off by Pedal.
13. Pedal Organ on and off by Pedal.
14. Battery attachment, No. I and II.
15. Hydraulic attachment.
16. Five Ventils.

The organ stands in a chamber on the north side of the chancel; the console is placed on the south side of the nave, a distance of 35 feet from the organ.

Insulated wires, electro magnets, and a voltaic battery, form the link between manuals and pedals and their respective sound-boards.

Metal tubes connect the drawstops in the console with the sliders in the sound-boards; the sliders are moved by valves governed by the pneumatic power bellows.

The swell and echo louvres are controlled by plungers and tubes of water.

There are two main and one exhaust bellows with ordinary feeders for manual labour, but preparation has been made for the addition of vertical feeders and two hydraulic engines, so placed as to leave the hand levers always available.

Each sound-board is supplied with wind from a reservoir of its own, and the pressure of wind varies from 2 inches in the echo to 6 inches in the solo.

The organ is being built by Messrs. Bryceson Brothers & Co., Stanhope Street, Euston Road, London, under the direction of Edwin Edwards, Esq., F.C.O., organist of Rugby School.

Figure 80 Rugby School Chapel – original stop specification of 1872
(source: *The Musical Standard* 421 (24 August 1872) pp. 114-5)

The provision for hydraulic-engine blowing was taken up in 1888, but there is said to have been a gas engine fitted for this purpose in Jex-Blake's time.[235] In 1892, a decision was taken to light the school by electricity generated at a powerhouse near to the gymnasium.

In December 1894, Bryceson Brothers issued a pamphlet indicating that the original specification of 50 speaking stops had been achieved and that electric motors were used to pump the bellows. It also confirmed that the pedal clavier used a tubular-pneumatic action, *vide* Figure 81. Walrond, in his essay of 1891, whilst recognising the changed pedal action, still maintained that there was a shortfall of sixteen stops. Similarly, Bradby, writing in 1900, noted that 'the original plan, however, is not yet complete: fifteen stops, the probable cost of which would be about £800, are still wanting'.[236] Was this perhaps a Bryceson Brothers anticipation of what the firm expected to be asked to carry out?

In 1897, there was a *volte face* by the authorities, a small oaken gallery was put up in front of the organ into which was put the detached console, *vide* Figure 82. It seems that the distraction felt by players having to play ahead of sound, especially when accompanying a choir, was too much. Bradby[237] said that the electric action had been retained, but Batigan Verne says that action was a combination of mechanical and pneumatic systems, a step that was 'a retrograde step indeed' [238] Further work is necessary to resolve this crucial issue. Hope Simpson, writing in1966, said that 'the organ was perpetually causing expense. A 'Kinetic blower' was installed in 1907, and in 1909 the instrument had to be entirely rebuilt at a cost of about £1,000'. [239]

---

235. Hope Simpson, J. B., *Rugby since Arnold* (London: MacMillan, 1966), p. 128
Thomas William Jex-Blake, Head Master, 1874-1887.

236. *Ibid*, p. 121

237. Bradby, H. C., *Rugby*

238. Verne, D. Batigan, *The Organ of Rugby School Chapel* 126 (1952), p. 69
Batigan Verne is also remembered for his work on the organ in Victorian poetry.

239. Hope Simpson, p. 145

GRAND ORGAN,

RUGBY SCHOOL CHAPEL.

Built by BRYCESON BROTHERS.

(Commenced 1878.)

In a spacious and lofty Organ chamber, N. side of Chancel, with richly decorated 16 feet front pipes filling Arches. The oak Console carries 4 Manuals, 60 Drawstops, 16 Accessory Pedals, Concave and radiating Pedal Clavier. Electro-Pneumatic action is employed for the Manuals and Tubular-Pneumatic transmission to all the Drawstops and Pedal Organ. Three Primary Bellows and Electro-Motors supply 10 intermediate reservoirs with various pressures of Wind and Exhaust Power.

		PIPES.	FEET.
	SOLO ORGAN, CC to G.		
1	German Gamba	56	8
2	Harmonic Diapason	56	8
3	Harmonic Flute	56	4
4	Corno di Bassetto	56	8
5	Tuba Mirabilis	56	8
	SWELL ORGAN CC to G.		
6	Bourdon	56	16
7	Open Diapason	56	8
8	Hohl-Flote	56	8
9	Keraulo dulce	56	8
10	Lieblich Gedackt	56	8
11	Principal	56	4
12	Harmonic Flute	56	4
13	Fifteenth	56	2
14	Cornet, 3 ranks	168	
15	Cymbal, 2 ranks	112	
16	Double Trumpet	56	16
17	Cornopean	56	8
18	Oboe	56	8
19	Vox Humana	56	8
20	Clarion	56	4
	Tremulant acting on Swell.		
	GREAT ORGAN CC to G.		
21	Double Open	56	16
22	Great Open	56	8
23	Small Open	56	8
24	Rohr Flote	56	8
25	Principal	56	4
26	Octave Gamba	56	4
27	Twelfth	56	3
28	Fifteenth	56	2
29	Full Mixture, 3 ranks	168	
30	Posaune	56	8
	CHOIR ORGAN CC to G.		
31	Violin Diapason	56	8
32	Salicional	56	8
33	Gemshorn	56	4
34	Flute	56	4
35	Clarinet	56	8
	ECHO ORGAN IN SWELL BOX.		
36	Echo Dulciana	56	8
37	Lieblich Gedackt	56	8
38	Hohl Flote	56	4
39	Spitz Flote	56	2
40	Musette (Pastoral)	56	8
	Tremulant acting on Echo.		
	PEDAL ORGAN CCC to F.		
41	Double Open	30	32
42	Open Wood	30	16
43	Violone	30	16
44	Dulciana	30	16
45	Sub-Bass	30	16
46	Violoncello	30	8
47	Bass Flute	30	8
48	Octave	30	4
49	Trombone	30	16
50	Bassoon	30	16

COUPLERS.

51	Solo to Swell.	56	Swell to Choir.
52	Solo to Great.	57	Solo to Pedals.
53	Octave Swell.	58	Swell to Pedals.
54	Sub-Octave Swell.	59	Great to Pedals.
55	Swell to Great.	60	Choir to Pedals.

ACCESSORY MOVEMENTS.

4 Combination Pedals to Swell.
4 Combinations to Great and Pedal Organs.
1 Swell to Pedals, on and off.
1 Great to Pedals, on and off.
1 Pedal Organ, on and off.
1 Choir Echo effect.
1 Swell Tremulant.
1 Echo Tremulant.
1 Swell Pedal.
1 Echo Pedal.

The Speech Room Organ—3 Manuals and 40 Stops—was built by BRYCESON BROTHERS in 1890.

BRYCESON BROTHERS,

54, ESSEX ROAD, LONDON.

December, 1894.

Figure 81 Rugby School Chapel stop specification issued in December 1894

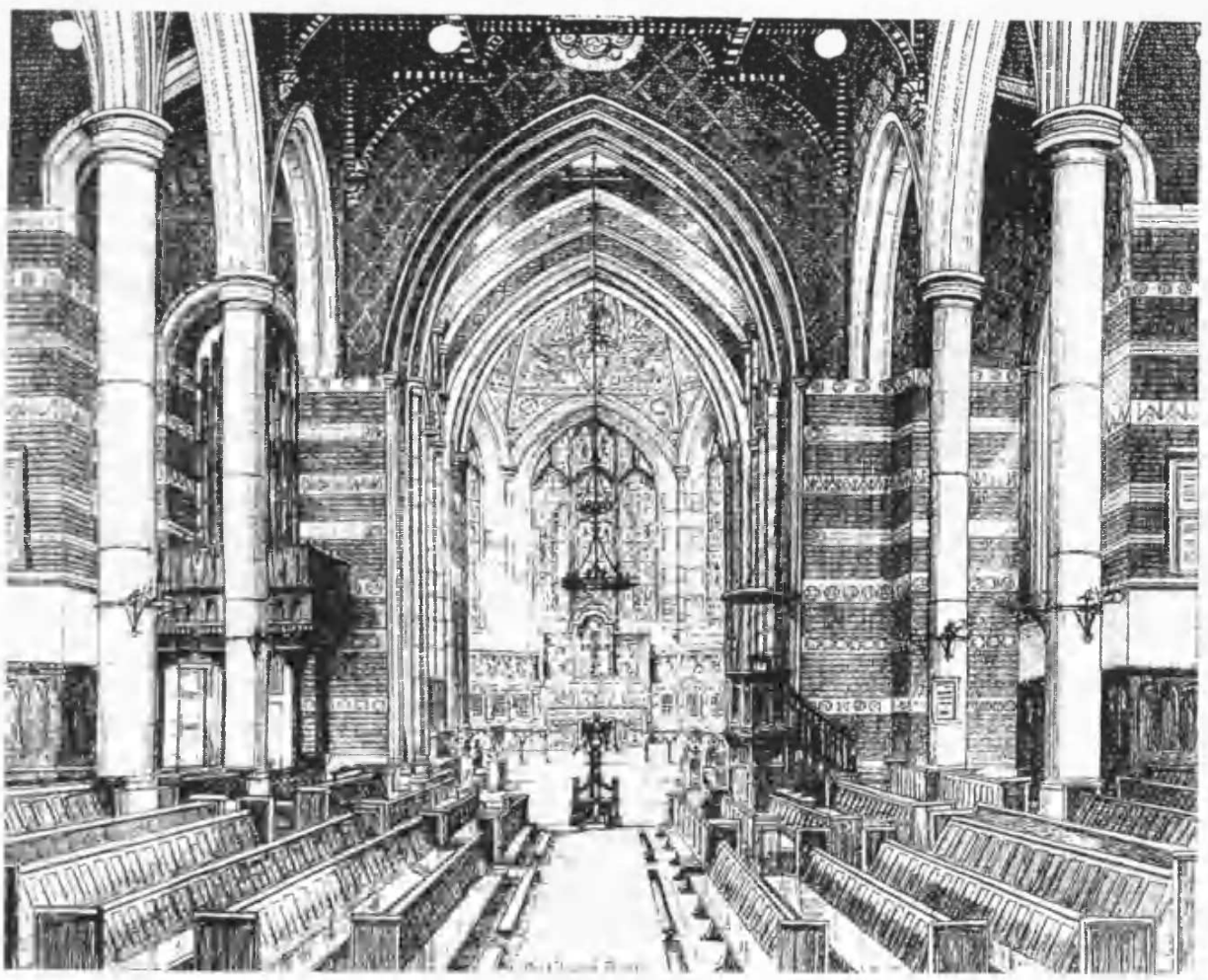

Figure 82 Engraving of Rugby school Chapel *circa*. 1900
Source: Rugby School archive)

By 1900, Bradby felt able to say that the organ is 'a fine instrument, and, as it now stands, has cost little short of £2,000'. In today's money that investment is equivalent to £115,000.[240] We have already noted Bradby's words that the 15 stops necessary to complete the organ would be about £800, say £53 per stop, so a 50 stop instrument would be equivalent to £ 164,000 today. Given that the unit cost for an additional stop is likely to be somewhat higher than the unit cost for the equivalent stop included as part of the original instrument, I am inclined to estimate the cost of a complete original specification organ at £2,500, or £145,000 in today's money. A similar specification instrument built now would be at least £700,000.

The rebuild of 1910 (the date given in NPOR Specification N07555 [241]) was carried out by Norman & Beard. Located in the same position on the north wall of the nave, it remained with four manual claviers and an integral console with mechanical and pneumatic action. The NPOR Specification lists 53 speaking stops. Another rebuild took place in 1960 when the console was again detached, but only 40 years later, a entirely new organ was put in by Kenneth Jones & Associates, this time with an *en fenêtre* console. [242]

Batigan Verne must have been a Bryceson *aficionado,* because he remarked that 'A curious conspiracy of silence seems to benight the name of this enterprising British organ-builder' and 'in any future modernisation Bryceson's original arrangements of 1872 ought to be restored'. It is to be supposed that the school authorities were indeed aware of Batigan Verne's feelings, but the opportunity to acknowledge Bryceson's achievement of 1872 with the Kenneth Jones instrument was sadly missed, so our organ heritage suffered a significant loss.

---

240. Economic History Services Inflation multipliers for Britain.
Source:http://www.eh.net/hmit/inflation/inflation.php
1860 to 2004: 47.5 ; 1870 to 200 : 50.3 ; 1880 to 2004: 53.2 ; 1890 to 2004: 65.9 ;
1900 to 2004: 62.8

241. National Pipe-Organ Register, N07555, Survey date:1952. http://lehuray2.csi.cam.ac.uk

242. National Pipe-Organ Register, E00052, Survey date:2000

In Brycesons time, the school's funding for the Chapel organ was seriously limited. But at the start of the twenty-first century, it seems that money for the organ had begun to have a higher priority in the ranking of needy projects. Let us leave with the thought that the school was sufficiently impressed with the Bryceson Brothers' capabilities and support from 1872 onwards to place a contract with the firm in 1890 for a new three clavier and pedal organ for New Big School, later transferred to the Temple Speech Room, where it still resides. This instrument has an *en fenêtre* console with mechanical action and Barker lever to the Great division and associated couplers.

The International Inventions Exhibition - 1885

After the exciting years of electric organ sales of 1868-1876, there was a lull. Perhaps the gossiping and rumour mongering about electric actions had their effect. Perhaps the expense of a detached console proved to be too much for church authorities to bear. The firm was not easily discouraged and a last attempt to open up the market was sought through a 'state of the art' concert chamber organ of [three] claviers and pedal for the International Inventions Exhibition of 1885 in London. There was strong competition, for Willis also entered the field with new technology, including the floating action lever and an electro-pneumatic action, the subject of a Henry Willis patent of February 1885. It seems that Willis was determined to obtain a Gold Medal for his exhibits. Other competitors were taking the opportunity to exhibit their tubular – pneumatic actions that, at least in Britain, were becoming exceedingly popular for larger instruments.

At the exhibition, the Bryceson Brothers deliberately placed the console 40 ft (13.9 m) from the organ. Whilst the clavier action was electromagnetic following the Barker system, the drawstop action was Brycesons' patented pneumatic action. The soundboard pallets followed the integral pneumatic design exploited at the Rugby School Chapel and Pro-Cathedral, Kensington instruments.

Blowing was automated with a Bisschop gas engine being used for the pressure and exhaust wind. Reciprocating batteries provided the electric power.

Quite what the word 'reciprocating 'means in this context is not clear. Perhaps it was to do with the electrodes being withdrawn from the batteries when wind was no longer needed. Another explanation, for which no contemporary evidence has been found, but which is suggested by my experimental work on the bichromate cell, is the importance of continual agitation of the electrolyte in maximising the instantaneous output of the cells. Perhaps the Brycesons had innovated reciprocating gear to provide a continual circular motion to the electrodes that assisted in the removal of gas bubbles from the carbon electrodes, especially when the electrolyte was degraded, and also ensured a fast mass transfer of reactants and reaction products at the surface of the electrodes. Knowing the technical capabilities of Henry and John Bryceson, such an explanation is highly probable.

The Gold Medal went to Bryceson Brothers and not, as Father Willis hoped and expected, to his own firm. Bicknell noted that the coveted medal went to Steinway for a constructional method, and later a second medal was awarded to Broadwood, who had shown a like method.[243] No doubt there were gold medals for the many different classes of exhibits, but in the organ world, Bryceson Brothers took the palm. After the exhibition, and some months in storage, the organ was purchased by the Revd Septimus Pontifex, a curate at the Church of St. Peter, Parkstone, near Poole, who presented the instrument to the church - a partially complete building - in memory of his mother. Bryceson brothers installed the Choir, Swell and Pedal divisions in a chamber high up in the Triforium on the north side of the choir. The Great was destined, but never installed, for a similar position on the south side. The electro-pneumatic action was powered by lead storage batteries and a Watkins & Watson hydraulic engine provided the wind. The stop specification is given overleaf.[244]

---

243. Bicknell, Stephen, 'The Testament of Theresa Willis' *JBIOS* 26 (2002), p. 41

244. http:/www.Nigel.Lloyd.dsl.pipex.com

Great	
12 stops prepared for	
Swell	
Double Open Diapason	16 ft
Open Diapason	8 ft
Echo Dulciana	8 ft
Rohr Flute	8 ft
Vox Celeste	8 ft
Vox Angelica	8 ft
Gemshorn	4 ft
Piccolo	2 ft
Mixture	III ranks
Horn	8 ft
Clarion	4 ft
Tremulant	
61 note claviers	
Black naturals, white sharps	
Three composition pedals for each clavier	

Choir (unenclosed)	
Bourdon	16 ft
Open diapason	8 ft
Corno Flute	8 ft
Lieblich Gedackt	8 ft
Salicional	8 ft
Octave	4 ft
Octave Flute	4 ft
Octave Quint	2 2/3 ft
Flageolet	2 ft
Echo Cornet	III ranks
Cor Anglais	8 ft
Trumpet	8 ft
Pedal	
Open Diapason	16 ft
Violone	16 ft
Bourdon	16 ft
Cello	8 ft
Flute	8 ft
Trombone	16 ft

We can see that with 41 speaking stops (including those prepared for on the Great), the instrument is considerably larger than the exhibition model of 24 stops. How was this achieved? Were the exhibition soundboards already large enough? Was the concert chamber organ only a two clavier instrument?

Some modifications were made 27 years later in 1915. Burton of Winchester fitted an electric fan, renewed the electric action, provided a motor to charge the batteries and added a large Open Diapason for the erstwhile silent Great division.[245]

---

245. W.J. Burton worked out of Winchester during 1894-1915. Apart from organ-building, he made pipes out of paper, and more significantly, patented an electric action (No.14223, 1903).

In 1930, the action had become very slow, so Compton was called in to provide an 11 rank extension organ using some of the Bryceson pipe-work. There were 73 'speaking stops'. By 1982, the organ was in an unreliable condition and there was concern over the excessive extension used by Compton. The instument was therefore rebuilt as a small un-extended three clavier and pedal organ by George Osmund who retained eight of the original Bryceson ranks. Further minor improvements, including the incorporation of an Oboe rank in the Swell division, were made in 2000.

4.8.2 Traditional organs

The Bryceson firm never built a cathedral organ (excluding a substantial reconstruction of Aberdeen Cathedral in 1871), but the firm was well versed in the design and building of three and four manual clavier instruments. Three examples are now discussed.

The Grand concert Hall Organ – Brighton

Friday 6 December witnessed the inauguration of a new Concert Hall in Brighton. It was not built by the town's Council, but by William Childs jnr., of 9 king's Road, Brighton, a tradesman as the *Brighton Gazette* called him, but a modern appellation of property investor would perhaps be more appropriate.[246] Horatio Nelson Goulty (1830-1869), a Brighton resident and partner of Goulty & Gibbons, was retained as architect for the venture, which stood on land bounded by West Street and Middle Street. [247] The building was unlike anything to be seen in the town: it was 200 ft long, 46 ft 6 in wide and 51 ft 6 in high with a large gallery for the public at the west end, and facing it, an eastern gallery housing the orchestra and organ. The hall has a semicircular roof supported by wrought iron ribs made especially in Belgium; truly, a portent that Britain's industrial revolution was moving towards its close.[248] It was lighted by ornamental glass running along the entire length of the roof with artificial lighting from sixteen gas chandeliers.

---

246. 'Inauguration of the New Concert Hall', *The Brighton Herald* (7 December 1867)

247. 'Description and History of the Building', *BrightonGazette* (12 October 1882)

248. 'Appended Notes – The Great Concert Hall', *Jimmy's Cards* (date *circa* 1878)

Although the hall and its organ were not entirely complete, it was opened by a series of four grand concerts on the 6 and 7 December 1867 during which Elijah, Rossini's Stabat Mater and Messiah were performed with an orchestra and choir of 330 performers, conducted by Jules Benedict, with Frederick Archer as the organist.[249]

Bryceson Brothers received *carte blanche* for the design of the organ. It was said to be one of the largest orchestral organs in England with four complete manual claviers of 58 notes and an independent pedal organ of 30 notes, the largest pipe being a wood Sub-bass of 32 ft. The organ case was of Italian design, with ornamental wrought iron and decorated with gold and colours. The sixteen ft metal pipes are arranged in two towers with a double tier of 8 ft metal pipes and projecting trumpets forming the centre front. The dimensions of the case are 25 ft wide, 16 ft deep and 37 ft high.[250] Its cost was upwards of £2,000.

Pneumatic bellows are employed to lighten the touch of the Great division and similar means are used to assist the combination pedals. Wind is supplied at three pressures. A novel feature is the automated high-pressure hot water heater placed beneath the organ to control the temperature and thus assist in maintaining band pitch tuning. The stop specification is given overleaf. This 49 stop organ with Bryceson's prediliction for the Violon Diapason and Violoncello, French ranks such as the Voix Céleste, Vox Humane and the German Rohrflote must surely rank as a fine example of the trend in England towards the romantic organ. There was no conservatism here and it reflected a line of development that was to reach its apogee in the chamber organ for N. J. Holmes.

The Concert Hall never met the expectation for first class concerts and oratorios that were originally envisaged so the organ fell into neglect. Although the hall

---

249. 'The Brighton Concert Hall ', *Brighton Gazette* (5 December 1867)

250. Hopkins, E.J. and 250. Rimbault, E. F., *The Organ, its History and Construction* (London: Robert Cocks & Co., 1877) pp. 584

Solo, 6 *Stops*.

	Pipes.	Feet.
1. Corno Dolce, metal	58	8
2. Orchestral Flute, metal	58	4
3. Corno di Bassetto, metal	58	8
4. Orchestral Oboe and Bassoon, metal	58	8
5. Tromba (Harmonic), metal	58	8
6. Clarion, metal	58	4

Swell, 14 *Stops*.

	Pipes.	Feet.
7. Bourdon and Double Diapason, wood	58	16
8. Open Diapason, metal	58	8
9. Viola, wood and metal	58	8
10. Rohrflote, wood and metal	58	8
11. Principal, metal	58	4
12. Echo Flute, metal	58	4
13. Flageolet, metal	58	2
14. Twelfth and Fifteenth, metal	116	3 & 2
15. Mixture (19, 22), metal	116	
16. Double Trumpet, metal	58	16
17. Voix Humane, metal	58	8
18. Cornopean, metal	58	8
19. Oboe, metal	58	8
20. Clarion, metal	58	4

(Tremulant acting on Swell.)

Great, 12 *Stops*.

	Pipes.	Feet.
21. Double Open Diapason wood and metal	58	16
22. Great Open Diapason, metal	58	8
23. Violin Open Diapason, metal	58	8
24. Hohlflote, wood and metal	58	8
25. Salicional, wood and metal	58	8
26. Principal, metal	58	4
27. Waldflote, wood and metal	58	4
28. Twelfth, metal	58	3
29. Fifteenth, metal	58	2
30. Mixture (19, 22), metal	116	
31. Trumpet, metal	58	8
32. Clarion, metal	58	4

Choir, 8 *Stops*.

	Pipes.	Feet.
33. Dulciana, metal	58	8
34. Flauto Traverso, metal	58	8
35. Voix Céleste, metal	58	8
36. Lieblich Gedact, wood and metal	58	8
37. Harmonic Flute, metal	58	4
38. Stopped Flute, metal	58	4
39. Harmonic Piccolo, metal	58	2
40. Clarionet and Bassoon, metal	58	8

Pedal, 9 *Stops*.

	Pipes.	Feet.
41. Sub-bass, wood	30	32
42. Open Diapason, wood	30	16
43. Violon, metal	30	16
44. Bourdon, wood	30	16
45. Violoncello, metal	30	8
46. Flute, wood	30	8
47. Bombarde, metal	30	32
48. Trombone, metal	30	16
49. Trumpet, metal	30	8

Couplers.

1. Super-solo to Choir.
2. Sub-solo to Choir.
3. Solo to Choir.
4. Solo to Great.
5. Super-swell to Great.
6. Sub-swell to Great.
7. Swell to Great.
8. Swell to Choir.
9. Choir to Great.
10. Solo to Pedals.
11. Swell to Pedals.
12. Great to Pedals.
13. Choir to Pedals.
14.
15.

Summary.

	Stops.	Pipes.
Solo Organ	6	348
Swell Organ	14	928
Great Organ	12	754
Choir Organ	8	464
Pedal Organ	9	270
Couplers	15	
Total	64	2764

4 Combination Pedals to Swell Organ.
4 Combination Pedals to Great Organ.
4 Combination Pedals to Pedal Organ.
4 Combination Pedals to Couplers.

Figure 83 Stop specification for the Grand Concert Hall - Brighton
(source: Hopkins and Rimbault, pp. 584-5)

was used for a variety of other purposes, it was a millstone around William Childs' neck and he incurred a considerable financial loss.

Sadly, on Saturday 7 October 1882, the Grand Concert Hall was destroyed in a fire that appeared to start in the vicinity of the organ. The adjacent Castle Hotel and Mellison's Restaurant in West Street were seriously damaged. Fortunately there was no loss of life, as the fire took hold in the early hours. The organ, which had been sold a few days or weeks earlier, but had not been removed, was totally destroyed. [251]

The Pro-Cathedral, Kensington

The Church of Our Lady of Victories in Newland Terrace, Kensington, was, during the later nineteenth century known as the Pro-Cathedral as it was the seat of the Archbishop of Westminster. Newland Terrace no longer exists and today the location of the Church is best defined as the corner of Abingdon Road and Kensington High Street. The building lies on a north –south axis with the altar in the south apse. It was built in the early English style of Gothic with a shallow chancel. After Westminster Cathedral was completed in 1903, the Church ceased to have the status of a Pro-Cathedral.

Bryceson Brothers put up the organ in1870. It was divided on either side of the west window. The firm was also commissioned to build a chancel instrument with electric action, but nothing was ever done. There was instead a separate organ placed near the altar that was used for minor services. Not unsurprisingly, Bryceson's patent pneumatic pallets were employed for the Great and Swell divisions of the main organ, but ordinary pallets were planned for the small chancel organ. C. A. Edwards writes:[252]

> 'We can, from personal experience, assert that a more easy, crisp, or pleasant touch we do not know. The pipes answer with a marvellous accuracy and rapidity, and the mechanism has gone through a

---

251. 'The Great Fire of Brighton', *Brighton Gazette* (12 October 1882)

252. Edwards, C. A., *Organs and Organ Building* (London: 'The Bazaar Office',1881) pp. 79-80

lengthened and somewhat hard trial without requiring repair or even attention. This speaks volumes for the invention, as it is a practical trial of the most severe description, the music at this church being of an unusually elaborate character'.

The only NPOR survey is dated 1900, listing its source references as *CD* and *Musical Opinion*.[253] It also states that the church was Anglican. Our perusal of the article in *Musical Opinion*, penned by one AMPHION, concerned music in London Catholic Churches, but gave a somewhat different specification to that of NPOR Survey N17491. [254] The *Musical Opinion* specification differs as follows:

1. The addition of a Hohle Flöte on the Great division
2. The addition of a Voix Célestes on the Swell Division
3. Two separate divisions: Choir and Chancel with a separate choir division having its own stop specification:

Lieblich Gedackt	16 ft
Gemshorn	8 ft
Viola	8 ft
Rohr Flöte	8 ft
Harmonic Flute	4 ft
Piccolo	2 ft
Euphone	16 ft
Clarionet & bassoon	8 ft

It seems that there was a misunderstanding by the compiler of the NPOR data as to whether the Chancel and Choir organs were alternates or two separate entities. We take the view that the main west end organ had three independent Great, Swell and Choir divisions and that the Chancel organ - when built - would have its own speaking stops. Both specifications are shown overleaf.

---

253. NPOR Survey, London, Greater, Kensington, N17491 *Our Lady of Victories, High Street, W8*

254. 'AMPHION', 'Music in London Catholic Churches', *Musical Opinion* 268 (January 1900), p. 258

NPOR Survey		*Musical Opinion*	
	Pedal		
Open Diapason	16 ft	Open Diapason	16 ft
Bourdon	16 ft	Open diapason	16 ft
Violone	16 ft	Violone	16 ft
Violoncello	8 ft	Violoncello	8 ft
Bombarde	16 ft	Bombarde	16 ft
Bassoon	16 ft	Bassoon	16 ft
	Great		
Double Open Diapason	16 ft	Double Open Diapason	16 ft
Open Diapason	8 ft	Open Diapason	8 ft
Horn Diapason	8 ft	Horn diapason	8 ft
		Hohl Flöte	8 ft
Stopped Diapason	16 ft	Stopped Diapason	8 ft
Salicional	8 ft	Salicional	8 ft
Principal	4 ft	Principal	4 ft
Harmonic Flute	4 ft	Harmonic Flute	4 ft
Flageolet	2 ft	Flageolet	2 ft
Mixture	III	Mixture	III
Trumpet	8 ft	Trumpet	8 ft
Clarion	4 ft	Clarion	4 ft
	Swell		
Double Diapason	16 ft	Double Diapason	16 ft
Open Diapason	8 ft	Open Diapason	8 ft
Viola	8 ft	Viola	8 ft
Echo Dulciana	8 ft	Echo Dulciana	8 ft
		Voix Célestes	8 ft
Principal	4 ft	Principal	4 ft
Echo Flute	4 ft	Echo Flute	4 ft
Mixture	III	Mixture	III
Contra Fagotto	16 ft	Contra Fagotto	16 ft
Cornopean	8 ft	Cornopean	8 ft
Oboe	8 ft	Oboe	8 ft
Vox Humana	8 ft	Vox Humana	8 ft
	Choir		
		Lieblich Gedackt	16 ft
		Gemshorn	8 ft
		Viola	8 ft
		Rohr Flöte	8 ft
		Harmonic Flute	4 ft
		Piccolo	2 ft
		Euphone	16 ft
		Clarionet & Bassoon	2 ft
Choir/Chancel		**Chancel**	
Open Diapason	8 ft	Open Diapason	8 ft
Corno Dolce	8 ft	Corno Dolce	8 ft
Clarabella	8 ft	Clarabella	8 ft
Harmonic Flute	4 ft	Harmonic Flute	4 ft
Doublette	2 ft	Doublette	2 ft
Tromba	8 ft	Tromba	8 ft

The Church suffered bomb damage during WWII and was derelict for some years. The present status is yet to be determined.

The chamber organ of 1872-1875 for N. J. Holmes Esq.

This instrument, constructed for the residence of Nathaniel John Holmes in Primrose Hill, represented at £7,500 (around £400,000 in today's money) the largest contract ever undertaken by the Bryceson Brothers (or Bryceson Brothers and Morten, as the business became known for a short time in 1873). It was the firm's magnum opus, whose scale was grander than that of St Paul's Cathedral, along with most other cathedral organs of the time, and which was surpassed only by a handful of contemporary concert and town hall instruments.[255]

Nathaniel Holmes was a wealthy gentleman who lived in an imposing house known as 'The Hall' at 9 Primrose Hill Road, just north of Regent's Park. Then, as now, Primrose Hill was a desirable area for London's well to do families. Today, The Hall no longer exists, having been pulled down in the early twentieth century to make way for smaller houses. Holmes was born in 1824: The 1881 British census records that he was 56 years old at the time and that his occupation was 'merchant'. He was a well-known amateur musician who was organist of St James Church, Dukes Place, EC3, around 1867,[256] and later on, made occasional contributions on organ design to the musical journals of the time.[257] By profession, he was an architect who had travelled extensively in Britain and abroad, and had become conversant with several important instruments. His other interests included submarine cables and 'electro-telegraphic processes'.[258]

The 1872-5 chamber organ was not the first instrument that Holmes had purchased from the Bryceson firm. In 1865 *The Musical Standard*[259] notes that 'A large chamber-organ is building by Messrs. Bryceson, Brothers, of Brook-street, Euston-road, for Nathaniel Holmes, Esq. It is to have three manuals and pedale'. There follows a specification for a 38 speaking stop organ of 2,042 pipes, six couplers and a similar number of composition pedals. J. R. Maidment[260] believes that this first organ of N. J. Holmes was purchased by William McQuade Jnr around 1874 for his family residence in the Sydney suburb of Potts Point.

---

255. Elvin, Laurence, 'An Echo from the Past: Mr. Holmes's organ', *Musical opinion* 1094 (November 1968), pp. 87-9
256. Camden Local Studies Library. Private communication
257. Holmes, Nathaniel J., 'The Transmission System', *The Organ* Vol 1 (October 1921), pp.126-8
258. Camden Local Studies Library
259. Editorial, *The Musical Standard* 71 (May 1865), p. 373
260. Maidment, J. R., Private Communication (July 2002)

The purchase date fits the imminent commissioning of the second Bryceson instrument in 1875. What is certain is that the McQuaide organ was built by Bryceson, for a brass name-plate inscribed 'Henry Bryceson' was discovered when the organ was dismantled for rebuilding in 1954. We must also note the similarity between the specification given in *The Musical Standard* and the stop-list recorded just before the 1954-7 rebuild.[261]

Holmes was something of a showman. The opening of his new organ on Monday 3 January 1876 was marked by the presence of the organ recitalist William Thomas Best, [262] and the next day, the organist-composer Félix-Alexandre Guilmant came specially from Paris to give a recital. Best followed with his second performance on 5 January, and Holmes's cup must surely have been overflowing with the engagement of the Belgian virtuoso, Jacques-Nicolas Lemmens, for 6 January. These were not occasions for the public, Holmes preferring to invite members of the Royal family along with 'persons specially distinguished in the aristocratic and art worlds'.

The Bryceson 'chamber' organ was housed in a specially built room that extended 100 ft from the front of a supposedly Gothic case to a gallery of the room. The console was not *'en fenêtre'* as was the custom at that time, but followed the Cavaillé-Coll preferred approach of detachment and reversal. Indeed, Holmes had also ordered the claviers in the French style with the great clavier being the lowest, next lowest the choir, and then the swell clavier, with the solo and echo divisions on the topmost (fourth) clavier.[263]

Such was the interest in the Bryceson firm's achievement that Hopkins and Rimbault[264] put aside three pages for a description of the instrument in the 1877 third edition of its organ treatise (perhaps this was a belated recognition that Henry Bryceson Snr was a subscriber towards the publication of the first edition in 1855!).

---

261. Rushworth, Graeme, D., *Historic Organs of New South Wales* (Sidney:Hale & Iremonger,1988), pp. 229-30

262. Elvin, Laurence, 'An Echo from the Past; Mr. Holmes's Organ' *Musical Opinion* 1094 (November 1968), p. 91

263. Elvin, Laurence, *ibid*, p. 91

264. Hopkins, Edward J. and Rimbault, Edward F., *The Organ, its History and Construction* (London: Cocks & Co., 3/1877), pp. 470-472

C. A. Edwards[265] made a somewhat shorter reference in his book *organs and organ building* of 1881. But apart from a short article by E. H. Lawton in 1936,[266] a sentence in Sumner's book of 1952,[267], and the two articles by Laurence Elvin in 1967 and 1968, there is silence. That such a milestone in Victorian organ history is not recognised by Bicknell, Hinton or even Thistlethwaite, is a mystery.

So, what was the tonal strategy of Best and the Bryceson brothers for Nathaniel Holme's organ? No doubt Holmes himself, as the client, had a controlling interest. At first sight, the detached and reversed console allowing the player to overlook the music room, ventils for the reeds on the Pedal, Swell, Choir and Echo, the ordering of the claviers (the Great or *Grand Orgue*) clavier being the lowest of the four with the Choir *positif* next, then the Swell or *récit-expressif*, and lastly the Solo-Echo), all suggest a strong French influence. Unfortunately, there is no engraving or picture of the console that shows whether the stop jambs were laid out in the nineteenth-century French style.

There is indeed a plethora of 8ft stops, several of which are strings, plenty of reeds, and a strong pedal division, but only two mixtures (one of which is an Echo Cornet), surely the basis for a typical English romantic/orchestral organ. But did Bryceson attempt French voicing? On the whole, the inauguration was well received by the national and local press.[268] There were, though, several comments on the noisy pneumatics; the Barker machine, even with the improvements made by Cavaillé-Coll, Willis and others, was notoriously noisy in quiet passages. A contemporary account[269] considers that 'The Great manual being put on the lowest row of the keyboard will, by many organists be considered a prodigious mistake as the player can have very little command over a keyboard placed so low down and the Choir being used the least of the three principal manuals, it would seem that the lowest row is its proper position'. The author thus appears to be unaware of the French method for obtaining *crescendi* in which the Grand Orgue clavier (with or without any stops drawn) is the foundation upon which the other claviers are coupled as the *crescendo* develops. He does rightly comment, though, on the lack of 2 ft stops and mixtures.

---

265. Edwards, C. A., *Organs and Organ Building* (London: The 'Bazaar' Office 1881), p. 238
266. Lawton E. H., *Musical Opinion* 711 (December 1936), p. 247
267. Sumner, W. L., *The Organ* (London: Macdonald 1/1952), p.222
268. *Hampstead Chronicle* etc
269. Editorial, *Nature*, (27July 1876), pp. 275-7

Here is the stop specification according to the third edition of Hopkins and Rimbault [270] (as printed):

Great organ

1. Double Diapason	16ft
2. Open Diapason	8ft
3. Viola	8ft
4 Hohlflöte	8ft
6. Salicional	8ft
7. Dulciana	8ft
8 Principal	4ft
9. Flute Harmonique	4ft
10.Twelfth	3ft
11. Fifteenth	2ft
12. Full Mixture	III rks
13. Trombone	8ft
14. Clarion	4ft

Choir Organ

15. Lieblich Bourdon	16ft
16. Spitz Flöte	8ft
17. Viol di Gamba	8ft
18. Echo Dulciana	8ft
19. Lieblich Gedact	8ft
20. Vienna Flute	8ft
21. Octave Viola	4ft
22. Flute Harmonique	4ft
23. Lieblich Flöte	4ft
24. Piccolo	2ft
25. Cor Anglaise	8ft
26. Clarionet and Bassoon	8ft

Swell organ

27. Double diapason	16ft
28. Open Diapason	8ft
29. Keraulophon	8ft
30. Hohl Flöte	8ft
31. Lieblich gedact	8ft
32. Voix Celestes	8ft
33. Principal	8ft
34. Lieblich Flöte	8ft
35. Octave Flageolet	1ft
36. Echo Cornet	III rks
37. Contra Fagotto	16ft
38. Cornopean	8ft
39. Hautbois	8ft
40. Vox humana	8ft
41. Corno di Bassetto	8ft
42. Clarion	4ft

Solo Organ

43. Clarionet (in separate swell)	8ft
44. Orchestral Flute	8ft
45. Piccolo	2ft
46. Tromba	8ft
47. Contra trombone	16ft
48. Carillon (a gamut of 61 bells)	4ft

Echo Organ

49. Bourdon Doux	16ft
50. Corno Dolce	8ft
51. Viole D'Amour	8ft
52 Voix Celestes	8ft
53. Flute Douce	4ft
54. Harmonica	IIII rks

Pedal Organ

55. Double Open Diapason	32ft
56. Contra Bass	32ft
57. Sub-Bass	16ft
58. Violon	16ft
59. Violoncello	8ft
60. Bass flute	8ft
61. Super Octave	4ft
62. Contra Bombarde	32ft
63. Trombone	16ft
64. Bassoon	8ft
65. Trumpet	8ft

Couplers and Ventils: on the left side

1. Solo to pedals
2. Swell to pedals
3. Choir to pedals
4. Great to pedals
5. Ventil to Pedal organ
6. Ventil to Echo organ

Couplers and Ventils: on the right side

7. Solo to Great
8. Swell super octave on its own clavier
9. Swell sub octave on its own clavier
10. Swell to Great
11. Swell to Choir
12. Ventil to Choir

Combination and accessory appliances–9

270. Hopkins, Edward J., and Rimbault, Edward F., *The organ, its History and Construction* (London: Cocks & Co., 3/1877), pp. 471-472.

There were two pedal stops of 32 ft speaking length. The 32ft metal pedal pipe in the central tower was 38 ft (11580 mm) long and had a diameter of 20 in (508 mm). The other 32 ft rank - a Contra Bass - was of wood. Altogether, there were 4,029 pipes and 61 carillon bells. All the manual pipes were full compass, CC to C (five octaves). The pedal pipes ran from CCC to F, i.e. 2 ½ octaves. The Choir and swell box shutters were operated by two foot-pedals, usually to the right hand side, but here placed in the centre. Pneumatic levers were used for the Great, Swell and Pedal claviers, with Brycesons proprietary electro-pneumatic action for the distant Echo organ. The firm's patented pneumatic technology was also used for the drawstop action in preference to its electro-pneumatic mode of operation, patented in 1868.

The wind pressures were: [271]

Great and Swell flues	4 in (102 mm)
Choir organ	2 in (51 mm)
Echo Organ	0.5 in (13 mm)
Solo organ, Swell reeds and large pedal reeds	6 in (152 mm)

The wind pressure for the Echo is remarkably low, and we would be tempted to regard 0.5 in as a misprint for 1.5 in, if it was not followed by the statement 'the lightest wind upon which any organ has ever yet been attempted to be voiced.' The article goes on to say 'that age is not requisite to mellow an organ is demonstrated by listening to the diapasons and foundation stops of the Primrose Hill organ, which have all that ripe and fascinating sweetness of tone characteristic of Silbermann's finest instruments, these light pressures of wind constitute a remarkable feature in the construction of so large an instrument. There were fifteen independent reservoirs supplied from a main

271. Editorial, *Nature* (27 July 1876), pp. 275-7

bellows reservoir in the basement of the concert hall, where also resided an 11hp steam engine for the operation of the feeder bellows.

This 'chamber' organ stands 50ft high, 30ft wide, and 30ft deep (15 m x 9 m x 9 m), with an overall weight of 87 tons. There is an engraving of the instrument, originally published in *The Daily Telegraph,*[272] showing Holmes seated by the side of the console, *vide* Figure 1.

Holmes was not to enjoy his possession for long, for he died in 1883,[273] whereupon the organ was purchased by the Albert Exhibition Palace Co.[274] The company's palace had originally been built for the Dublin Exhibition of 1872, and the building was in the process of being transferred for re-erection in Battersea Park.[275] The building, which was re-opened in 1885, was sited where Albert Palace mansions now stands. It was some 580 ft in length and 120 ft in width, built of iron and glass. It was used as an exhibition hall, conservatory, concert hall, aviary and hippodrome. Reynolds' Shilling Map of London for 1895 [276] in reference to The Albert Palace, says 'A handsome glass structure comprising halls for concerts and general entertainments. The Grand organ in the Connaught Hall is considered one of the best in the United Kingdom'.

By 1894 though, the Albert Palace Co. was defunct, and the premises were pulled down. The organ was then acquired by the monks of St. Benedict's Abbey at Fort Augustus in Scotland, which was then in the course of construction, but it was not until 1914 that the choir of the Abbey was ready to receive an organ. In that year, the organ-builder E. H. Lawton erected part of the Bryceson organ as a temporary instrument with the help of two of the Abbey's lay brothers. Initially conceived with two manual claviers, it was completed as three clavier organ using the original Swell flue soundboard as the Great, the Choir soundboard as the Swell, and the Echo, with its electro-pneumatic action discarded, as the new Choir. A much smaller pedal

---

272. *Daily telegraph* (29 August 1893)

273. Elvin,Laurence, 'An Echo from the Past: Mr. Holmes's organ' *Musical Opinion* (November 1968), pp. 87-91

274. Lawton, E.H.,'The Old Regent's Park Organ' *Musical Opinion* 711 (December 1936), p. 247

275. Wandsworth Borough Council, Conservation Area Statement, No. 29: Battersea Park, www.wandsworth.gov.uk/NR/Wandsworth/localpdf/planning/plothconbatpark.pdf122.

276. http:// www.victorianlondon.org/entertainment/batterseapark.htm

division of two 16 ft and one 8ft rank were installed, the huge 32ft metal double and 16ft Violon ranks, although erected, were never completed, owing to the difficulty in obtaining pneumatic tubing during the war years. An electric motor was used to drive two of the large hinged feeder bellows.

Lawton, in his 1936 article, made a valuable observation: 'the earthenware cells of the bichromate battery were knocking about the monastery for many years, - they were as big as wash-house boilers!' He does not say how many jars he saw, but there had to be at least two. If we assume that a wash-house boiler of those times would have had a diameter of 20 in (508 mm), with perhaps a height 24 in (610 mm), then that ensemble was indeed a very powerful battery for the electricity supply to a very small Echo organ. One possibility is that Bryceson had used powerful direct electromagnet action for the draw stops, as there would have been insufficient air pressure (0.5 in) from the wind supply for the prompt operation of a pneumatic motor system (although Bryceson may have used dedicated trunking from the main wind supply at the other end of the room). Even the use of direct electric action for the stop control does not really explain the need for such a large battery. Was there was some other use for electricity in the music room? Further investigation is needed.

Thus the Abbey organ remained until 1936, when unreliability forced a rebuild. It was decided to reconstruct the organ using all the parts left over from the Albert Exhibition Palace days (and still lying in the Abbey premises), albeit with a modern action and playing aids, some tonal changes, and a different disposition.[277] The action was electro-pneumatic, with the console placed in the choir stalls, some 13 metres from the organ chambers. The number of stop-keys, including the couplers and transfers was 100. There were also 16 adjustable thumb pistons, and four toe pistons alongside three balanced shutter pedals and a general crescendo pedal. Three electric blowers provided wind, a large unit for the Great, Swell and Choir, a high pressure blower for the Solo, an additional extra high pressure stage for the Tuba Mirabilis, and a small low pressure unit for the Echo organ.

---

277. Elvin, Laurence, 'The organ at Fort Augustus Abbey' *Musical Opinion* 1074 (May 1967), p. 469

The specification for the 1936 rebuild is as follows:

Great organ

1. Double Diapason	16ft
2. Large Open Diapason	8ft
3. Small Open	8ft
4. Horn Diapason	8ft
5. Trigon Flute (Triangular-old Hohlflöte)	8ft
6. Flauto Traverso	8ft
7. Salicional	8ft
8. Dulciana	8ft
9. Harmonic Flute	4ft
10. Principal	4ft
11. Twelfth	2⅔ft
12. Fifteenth	2ft
13. Full Mixture	III rks
14. Tromba	8ft
15. Octave Tromba	4ft

Choir organ

16. Lieblich Bourdon	16ft
17. Spitzflote	8ft
18. Vienna Flute	8ft
19. Lieblich Gedacht	8ft
20. Aeoline	8ft
21. Viol d'Orchestre(new)	8ft
22. Viol di Gamba	8ft
23. Octave Viola	4ft
24. Flute Harmonique	4ft
25. Lieblich Flute	4ft
26. Piccolo	2ft
27. Clarinet	8ft
28. Cor Anglais	8ft

Swell Organ

29. Double-stopped Diapason	16ft
30. Open Diapason	8ft
31. Hohl Flute	8ft
32. Keraulophon	8ft
33. Rohr Flute	8ft
34. Vox Celeste	8ft
35. Prinicpal	4ft
36. Lieblich Flute	4ft
37. Flageolet	2ft
38. Mixture	III rks
39. Contra Fagotto	16ft
40. Cornopean	8ft
41. Oboe	8ft
42. Corno Di Bassetto	8ft
43. Clarion	4ft
44. Vox Humana	8ft

Solo Organ

45. Orchestral Flute(harm)	8ft
46. Wald Flute (new)	4ft
47. Harmonic Piccolo	2ft
48. Principal(new)	4ft
49. Double Trumpet	16ft
50. Tuba Mirabilis (unenclosed)	8ft
51. Tubular Bells (18 from Tenor C)	4ft

Echo Organ

52. Lieblich Bourdon	16ft
53. Dulcet Diapason	8ft
54. Lieblich Gedacht (new)	8ft
55. Viol D'Amour	8ft
56. Unda Maris	8ft
57. Flauto Dolce (harmonic)	4ft
58. Flautina	2ft

Pedal Organ

59. Double Open Diapason	32ft
60. Open Diapason (wood)	16ft
61. Open Metal (from Double Open 32)	16ft
62. Violone	16ft
63. Bourdon	16ft
64. Bourdon Minor (from Echo)	16ft
65. Principal(from Open Wood)	8ft
66. Cello (from Violone)	8ft
67. Octave Bourdon(from Bourdon)	8ft
68. Bass Flute	8ft
69. Octave Minor (from Bourdon Minor)	8ft
70. Octave Principal	4ft
71. Contra Bombarde	32ft
72. Trombone (from Bombarde)	16ft
73. Trumpet	8ft
74. Bassoon	8ft

Couplers

Solo – Echo to Choir
Swell to Choir
Swell to Great
Choir to Great
Solo – Echo to Great
Solo to Swell
Solo to Pedal
Echo to Pedal
Choir to Pedal
Swell to Pedal
Great to Pedal
Solo Tuba to Great
Swell Reeds to Great
Swell Octave
Swell Sub Octave
Unison Off
Echo Octave
Choir Octave

Tremulants

Choir
Swell Reeds
Swell Flues
Echo

Accessories

Twenty-four thumb and toe pistons (all adjustable), including four double-touch thumb pistons each to Swell and Great Organs giving suitable pedal stops.
Four balanced pedals (electrically operated) to Swell, Choir, Solo, Echo and Pedal reeds; and general crescendo.

Wind Pressures

Echo, Choir, Swell, Flues	3 in
Pedal Flues and Great	3½ in
Swell Reeds, Pedal Reeds and Solo	5 in
Tuba Mirabilis	10 in
Action	6 in

By 1967, the organ action was proving troublesome, and the instrument was in need of a complete rebuild. All this though, had to await 1979, when Rushworth and Dreaper Ltd rebuilt it as a much smaller instrument of three manuals and 37 ranks.[278] It does not appear that the 32 ft metal pedal rank was incorporated into this instrument, as Basil Blackburn[279] saw the pipes 'cut up into manageable lengths, lying in a quadrangle/courtyard, well out of sight', during a visit to the Abbey around 30 years ago. By 2000, the Abbey was in financial difficulties and shortly to close its doors, so during September 2000, Rushworh and Dreaper was commissioned to transfer the organ to the Roman Catholic Church of St. Peter, in Buckie, Grampians, during September 2000, where it now resides.[280]

---

278. NPOR, survey N18083

279. Blackburn, B. S., private communication, 26 June 2003

280. NPOR, survey D08315

5. THE 'ELECTRIC ORGAN' AS A MUSICAL INSTRUMENT

There is hardly a technical development in organ technology that has aroused such a partisan approach to its introduction and continuing use as that of electricity for organ actions. Such innovations as the English swellbox in the early eighteenth century, the embryo pedal clavier as an independent division in the 1830s, pneumatic power sources for pallet and stop control, hydraulic motors, centrifugal fans for wind generation, the orchestral organ, solid state and computer control as a registration aid (what modern organist actually 'draws' a stop in a recital today?), man-made materials of construction in place of wood and leather - all these had (and have) their supporters and detractors. But the broad pattern of technical change is seen as acceptable progress for organists, builders and musicians alike. Only electric action remains a contentious issue, with powerful voices speaking for its supposed virtues or defects. It has to be said, however, that this contention is now a European obsession; most organ-builders in the United States appear to take a more pragmatic position and offer both electric and mechanical actions as a marketing tool, thus recognising the ultimate importance of the investment-benefit approach to the making of decisions.

5.1 Advantages and disadvantages

The enthusiasm of the electric action pioneers during the late 1860s - Barker in France and Bryceson in Britain - stemmed from three deficiencies in the mechanical action organ, namely:

the heavy touch of the instruments
its unreliability, especially in changing climatic conditions
the limited possibilities for console location.

The introduction of higher wind pressures, especially for larger organs and for the new orchestral reeds developed by Cavaillé-Coll, Willis and others only made the touch problem worse. Whilst Barker's pneumatic lever had

addressed the heavy touch, it had its own problems with noise and slow release, not to mention the further complications it brought to the mechanical systems. Full tubular pneumatic action, a potential answer to the traditional tracker action and first attempted by the Montessier in the 1830s, was not to become a serious option until the 1880s, and then only for a console separation from the soundboards of less than 30 ft (9 m).

In Germany at that time there were serious discussions between organ academics, builders and organists about the merits or otherwise of electric and tubular actions.[281] Earnest debate took place about the diameter of pneumatic tubes: should the internal diameter be as wide as possible or the converse? The organ-builder Klassmeier even stated that the action of his *Fernwork*, 50-60 metres distant from the console at the Garnisonskirche, Bielefeld, responded as quickly as the *Hauptwerk*, only four metres away! [281] During all this time, the 'touch' of pneumatic instruments was also questioned. Was it too light or too heavy? There was also the suggestion that a heavy touch was desirable because it prevented the organist from playing too quickly. We are left with an impression that the much reputed scientific approach of the Germans was notable for its absence, at least in the field of organ-building.

The virtue of electric action was the instantaneous response between the console and the soundboard magnets – not that some writers thought this was desirable. Wangemann's opinion was that 'despite the words of Mr Blumenthal, I consider the organ of Mr Weigel very impractical – it is nothing but a replacement of the tracker of each key by a telegraph wire'. [282] Again, we have to wonder at what Wangemann was really trying to say with this sort of strange comment. Henry Bryceson in his paper to the Society of Arts is

---

281. Fidom, Hans, *Diversity in Unity: Discussions on Organ Building in Germany between 1880 and 1918* (Amsterdam: Royal Dutch Organists Association, 2002), pp. 96

There is confusion over how fast a signal travels in a tube. Some early writers, and even organ experts today, believe that it approaches the speed of sound. In reality, the velocity is dependent on the pressure difference, diameter and length of the tube, number of bends, smoothness of the internal surface of the tube etc., and is considerably less than the speed of sound.

282. Wangemann, Otto, *Orgel und der Orgelbaukunst* (Demmin: 1881), pp. 442-3

much more helpful: 'it occurred to Mr Barker, as it had already done so to others, that, seeing what had been accomplished in telegraphy – by which the most delicate movements are transmitted to indefinite distances with rapidity and precision – it might be possible to apply the same principle to the organ'.[283] In his eulogy for the electric organ, Bryceson says:

> The adoption of electricity and insulated wire to replace or supersede mechanical action in large organs is not merely a new process to attain the same end, but, independently of the suppression of a multitude of moving parts, many new advantages are presented otherwise unattainable. The touch is more delicate, rapid, uniform, and invariable.

Bryceson goes on to extol the advantage of being able to place keyboards at any required distance from, and quite irrespective of, the position of the organ. This advantage was described in *The Musical World* in July 1868, probably the earliest editorial about electric action to be published.[284] The article described Bryceson's first electric organ, which the firm erected for Her Majesty's Opera, Theatre Royal, Drury Lane, and publicly used for the first time on 25 May 1868 (the opera house in The Haymarket was destroyed by fire in 1867). Mr Pitman, the eminent organist at the theatre, was said to be entirely satisfied with the instrument, the pipes of which were in the 'flies', 50 ft (15.2 m) away from the console in the orchestra pit. The journal's editor was moved to say that 'a favourable verdict from such an authority is conclusive as to the merits of the invention' – but perhaps this was before the batteries ran out.

Most builders and players, then and now, would agree that the resolution of the three deficiencies of mechanical action outlined above is admirable and that electric action represented a substantial and progressive development in pipe organ technology. Organists, especially, valued the opportunity to place the console near to their choirs, so that the balance could be achieved and they had contact with their singers.

---

283. Bryceson, Henry, *Journal of the Society of Arts* 840 (25 December 1868), pp. 83-4

284. Editorial, *The Musical World* 29 (July 1868), p. 506

To this, we must add another advantage: the ease with which electricity may be used to provide advanced registration aids, a capability of considerable value in the playing of music for the romantic organ pioneered by Cavaillé-Coll in France. This firm was unsympathetic to electric action, at least whilst Cavaillé-Coll was alive, relying on pedal-operated ventils and couplers, and also the services of a registrant.[285] Tubular pneumatic instruments, never very popular in France where the Barker lever continued to hold sway throughout the second half of the nineteenth century, were ultimately able to approach the versatility provided by electric action, albeit with a high degree of complication. The most frequently cited disadvantage of the electric organ is said to be the lack of 'feel' in the connection between the keys and the soundboards (a lesser disadvantage, especially in older systems, is noise from the electromagnet operating the power bellows). At first sight, we may postulate that the telegraph does not enable the operator to transmit his feelings and that the electric organ cannot convey the nuances of the player's interpretation of the music. In the 1860s, touch was still determined by the inertia of heavy levers, rods and rollers, and the frictional resistance of bearings and bushes. Today, the design of mechanical actions is more scientific and the individual components are lighter. So touch has become an important aspect and many performers say that they wish to be able to control the speech of the pipes. It also used to be said that experienced Morse code telegraphists could always tell who the sender was by the peculiar nuances of his fingers.

---

285. Peschard wrote to Cavaillé-Coll on a number of occasions in an endeavour to persuade him to take a more pro-active attitude to the new system. But although Cavaillé-Coll professed interest, he excused himself on the grounds of infirmity and financial difficulties, and that electric action was for the future. Peschard's approach on this subject was not the first, for Gauntlet had made the attempt twenty years earlier. At that time, Cavaillé-Coll was already familiar with Stein's patent (indeed he said that he would send Gauntlett the date of the patent), but he was concerned about the cost of maintaining the power supply for only a few hours each week. Nevertheless, he was willing to place his services at Gauntlett's disposal for the procurement of a French patent. I have concluded though, that Gauntlett was already familiar with Stein and his patent and that there was an arrangement between them, *vide* page Section 3.3.1, page 32.

5.2 Reviews by composers, organists and organ-builders

Almost certainly, the first letter on the electric organ to be published appeared in *The Musical Standard* during February 1868. One Augustus Lashman Tamplin (1838 –1889), a London organist of some distinction, was the correspondent.[286] In the letter, Tamplin reported that he had many opportunities for playing Barker's three-clavier electric organ at St-Augustin, Paris during his stay in that city. 'The touch of the organ is something exquisite, and the application of electricity has already been pronounced a complete success'. Tamplin finishes his letter by noting that the British patent rights were ceded to 'Messrs. Bryceson Brothers and Co., who are now constructing a large organ on this principle, upon which recitals will be given whilst at their factory'.

What the letter does not say is that Tamplin was the demonstration organist for Bryceson's organ exhibit at the Paris *Exposition* of 1867.[287] Nevertheless, there must have been more than an element of truth in his remark about the organ's touch. The letter sparked an immediate response from no less an organ-builder Thomas C. Lewis, who objected to the suggestion that Barker was the inventor of the electric organ, citing the prior art of Gauntlett and Goundry.[288] Tamplin felt that Lewis deserved a reply saying 'having played many times the organ at the Church of St-Augustin, that Barker's application not only *acts*, but acts perfectly' and that he 'was the first to bring the electric organ under the notice of Messrs. Bryceson, and that that firm showed something above ordinary enterprise in embracing the idea.' [289] Once again, Lewis was again stung to reply.[290] Apart from reiterating Goundry's prior art,

---

286. Augustus L. Tamplin, letter in *The Musical Standard* (29 February 1868), p. 95. Tamplin was organist at St. Thomas, Portman Square, in 1866. In 1862, he provided the specification for the Henry Wedlake organ at Strood Parish Church, Kent. In 1866, he designed and supervised the construction of a three manual chamber organ for Henry Alers Hankey, also built by Wedlake, which included a 16 ft bass clarinet especially for use in music transcribed from Meyerbeer's 'Robert le Diable'.

287. Hinton, J.W., *Story of the Electric organ* (London: Simkin, Marshall, Hamilton, Kent, 1909), p. 46

288. Lewis, Thomas C., *The Musical Standard* (7 March1868), p. 111

289. Tamplin, Augustus L., *Ibid* (14 March 1868), p. 123

290. Lewis, Thomas C., *Ibid* (21 march 1868), p. 4

he quoted from an unnamed account: ' With all its perfection and charm of ease, the pneumatic lever still lacked, even under the most skilled maufacturer's hands, *one thing,* and that was, the power of repeating rapidly. This was felt by many, and hence the oft-attempted electric organ'. Here, Lewis does not appear to realise that a power bellows triggered by an adjacent electromagnet is a much simpler mechanism than that of a pneumatic lever interposed within a traditional mechanical action. In fact, Lewis, with his friend William Lea, had visited Barker's workshop in Paris in 1864 and were able to try the *positif* division. Both men agreed that that it appeared to work well, 'but would only be used in few and extreme cases'. Perhaps Lewis was disappointed that he had not taken up an opportunity to obtain the patent rights for Britain. In the late 1880s, he began offering electric action, but without any notable sales successes.

All was quiet until the summer of 1868, when William Spark (1823-1897) sent in a long letter to the *Leeds Mercury,* which was then forwarded to *The Musical Standard.*[291] Apparently, Spark had been able to make a 'close personal examination' of an electric organ (probably the Bryceson organ at Her Majesty's Theatre), after which he felt confident to speak of its merits. He reported that the touch 'is as light as that of a good piano', and later on 'secure a more rapid and delicate touch than is possible with the finest known mechanism'. But for Spark, the opportunity to place the console at any distance from the organ was an exciting possibility. His praise for Bryceson's pioneering work was then somewhat spoilt by suggesting that a musical clergyman might have a console close to his reading desk or pulpit, or

---

291. Spark, William, *Ibid* 209 (1 August 1868), p.40

William Spark (1823-1897) was trained by Samuel Sebastian Wesley at Exeter Cathedral. He followed Wesley to Leeds where he became organist of the Parish Church. Later he was appointed Town Hall organist and became a well-known recitalist. *Musical reminiscences by William Spark* was a memoir published in 1892 that recounted his conversations with Wesley, Jeremiah Rogers and others. Also recorded was a visit to St Michael, Hamburg to see the Hildebrand organ, when he thought the 'reeds and swell organs to be poor and defective'.

perhaps the minister's wife or daughter could have the keyboard in their own pew. In September 1868, a correspondent had asked where he might obtain a complete and technical account of the way in which electromagnetism is applied to the playing of organs.[292] Henry Bryceson promptly replied saying that an account would appear in the next edition of Hopkins and Rimbault's work on the organ, referring also to the patent specifications of Gauntlett, Goundry and the forthcoming publication of the Barker and Bryceson specifications.[293] A more critical response was made by 'Pneumatics for Ever' who praised Barker for inventing two of the most valuable additions to the mechanisms of large organs, but drew attention the deficiencies of the batteries and 'mercurial contacts'.[294]

August Gern, previously Cavaillé-Coll's foreman and now established with his own business in London, had attended Henry Bryceson's lecture at the Society of Arts on 23 December 1868.[295] During the discussion he had asked why Bryceson had said that long mechanical actions posed difficulties for both builder and organist. Whilst working for Cavaillé-Coll, he had erected several instruments with extremely long actions without difficulty. He cited the organ in the Carmelite Church at Bordeaux that had keys 60 ft (18.3 m) away from the instrument, and this with 'no pneumatic machine'. He concluded that those that had tried both systems 'will agree that a better repetition is gained with the ordinary mechanism than with the other'. Bryceson replied that he had given a fair answer at the meeting and was not moved to make further explanation. He did express curiosity as to what use Gern himself would make of 'Mr Barkers's "latest" patent invention' when he saw no necessity for it. Did Bryceson shew prescience, or did he already know? For a few months later, Gern took an advertisement offering church and saloon organs: 'either

---

292 Dixon, J., *The Musical Standard* 216 (19 September 1868), p. 115

293. Bryceson, Henry, *Ibid* 217 (26 September 1868), p. 122

294.'Pneumatics for Ever', *Ibid* 217 (26 September 1868), p. 122

295. Bryceson, Henry, 'The Electric Organ' *J. Soc. Arts* 841 (25 December 1868)

with Mr Barker's *latest* patent electric action, or on the model and of the same Material and Workmanship which has so long distinguished the Firm of Messrs Cavaillé-Coll and Company'.[296] In his letter of reply to Gern, but in answer to a point raised by Mr Bavin at the lecture, Bryceson makes a telling point: 'if electricity were an intermittent and uncertain power, surely people's lives would not be committed entirely to it daily on railways, and in our great steam vessels, when both engines and steering are directed by telegraphy'. The inherent suspicion of electricity by organ-builders did not go away. As late as 1899, Thomas Casson was opining that 'electricity was an inferior, more costly, more complex, and less trustworthy medium'.[297]

The spate of correspondence continued in February 1869 with a tongue in cheek letter from 'Tommy' headed 'Electrifying: an Idea for Messrs Bryceson'.[298] It seemed that Plymouth was badly off for organs and organists, so Tommy proposed that Messrs Bryceson erect an electric organ in the city and that a cable be laid to the home of Mr Best in Liverpool. From time to time, Best could be summoned by telegram to a console in his library or hall where he could enchant his Plymouth audience with Bach's G minor fugue, the 'Hailstone Chorus' etc. We may imagine Best's reaction to the idea. A more meaningful article in *The Church Times* commented on the lightness of touch and quickness of speech of Bryceson's organ at St. George's, Tufnell Park, [299] *vide* Figure 84. Once more, we note the suggestion: 'if need be, a keyboard arranged under the reading-desk, so that remote places where lack of professional skill exists, a musical clergyman could himself conduct the service of song.' Did *The Church Times* not appreciate the contribution of the pedal organ in supporting congregational singing? More notably, the rapid expansion in church building at that time did not appear to be matched by the supply of organ players.

---

296. Advertisement by M. August Gern, *The Choir* (5 March 1870), p. 103

297. Casson, Thomas, *Musical Opinion* 266 (1 November 1899), p. 113

298. 'Tommy', *The Musical Standard* 237 (13 February 1869), pp. 77-8

299. Editorial, *The Church Times* (14 May 1869)

100 YEARS AGO

The Church Times

May 14, 1869

THE recent application of electricity to church organs seems likely to supersede the ordinary system upon which these instruments are constructed. A new electric organ just erected by Bryceson Brothers, in St. George's Church, Tufnell Park, which was opened on Saturday last by Mr. Limpus of St. Michael's, Cornhill, displayed very clearly the advantages of the system; the touch is most agreeably light, the quickness of speech is unsurpassed, and, as in this case, the organ may be elevated on a platform above the heads of the people, so that no sitting room be lost; while the organist may be placed in the chancel, or, if need be, a keyboard arranged under the reading-desk, so that in remote places where a lack of professional skill exists, a musical clergyman could himself conduct the service of song.

Figure 84 Editorial in *The Church Times*

As Bryceson promised, the 1877 edition of Hopkins and Rimbault did indeed have an extensive and up-to-date exposition of the electric action, with a whole chapter of nineteen pages devoted to the new technology. It has to be said that much of it was drawn from the Bryceson lecture to the Society of Arts in December 1868, although there was a useful update on the firm's progress in the intervening period .[300] The one notable absence so far in the British discussion is Peschard's name.

Again, all remained quiet in the press until 1876, when W. T. Best (1826-1897) inaugurated N. J. Holmes's chamber organ on 3 January 1876. The instrument was fitted with pneumatic levers except for the Solo Division that was mechanical, and the Echo division that had electric action because of its distance from the console. There were editorials in the newspapers, but no comment on the use of electricity, *vide* above Section 4.8.2. 1886 saw the inauguration of the Willis electric organ at Canterbury Cathedral. Dr John Stainer, retained by the Cathedral Chapter to prove the instrument, wrote in his certificate: 'The mechanism is a marvel of ingenuity' and later on 'a novel and perfect electric communication'.[301] The Cathedral organist, Dr N. H. Longhurst, had earlier visited Paris to see the St-Augustin organ in the company of Barker, but was unimpressed because the organ was out of action (Barker excused this because of a severe thunderstorm at the time).[302] Nevertheless, Longhurst also wrote to the Chapter in August 1886 saying that 'the electrical appliances alas, rendered necessary by the situation of the console, being a perfect marvel of ingenuity and skilful appliance'.[303]

---

300. It is now apparent that the earliest principal source of anecdotal material such as Barker's correspondence with Dr Camidge (organist at York Cathedral during 1833), his first contact with Cavaillé-Coll, the subsequent history of Barker's time in France, the claim of prior art by Hamilton for the pneumatic lever, and Gauntlett's concept for playing all the organs in London from a console under the dome of St. Paul's Cathedral, is Henry Bryceson, based on his direct contact with Barker in Paris

301. Canterbury Cathedral Chapter Archives DCC/CA 14, 23 August 1886, p. 50

302. Bicknell Stephen, 'The Testament of Theresa Willis', *JBIOS* 26 (2002), p.41

303. Canterbury Cathedral Chapter Archives DCC/ Fabric 8/28/4 (30 August 1886)

Willis, however, maintained a conservative attitude. In 1892, he was to write to the *Musical News* that the firm had often been asked to place the console of a west end organ in the chancel, but had refused 'because dame nature stood in the way' (which it certainly did if tubular pneumatics had been used).[304]

In March 1891, Robert Hope-Jones wrote to *The Musical Standard* to say that 'electro-pneumatics [are] capable of over 300 clear repetitions per minute, a speed greatly in excess of any organist's fingers'.[305] Two months later, Hope-Jones presented a paper to the College of Organists on his recent conversion of the St. John, Birkenhead organ (where he was the organist and choirmaster). [306] Except for the mention of a 'a single dry cell' that became during the discussion to 'two or three dry cells,' plus a characteristic intervention by August Gern, the occasion serves to have marked the start of the second, more advanced phase in the promotion of the electric organ. Several instruments were built with the Hope-Jones licence during the remainder of the decade. The paper did not arouse any critical review of the musicality of the electric action, but it did prompt *The Musical Standard* during April-May 1891 to launch a series of five articles on the history of the technology.[307] The same journal also reported on the Hope-Jones lecture and gave a fuller account of the discussion. We learn, for example, that the organist of St. Johns, Red Lion Square, E.C., was not happy with his electric action and that the lowest cost for batteries was £50 a year.[308] One wonders who supplied the battery.

---

304. Willis, Henry,

305. Hope-Jones, Robert, *The Musical Standard* 1390 (21 March 1891)

306. Hope-Jones, Robert, 'Electrical Aid to the Organist', *College of Organists Lectures* 1890-91 (1892), pp. 1-12

307. Editorial, 'The Past and Future of the Electric Organ', *The Musical Times* 1395, 1396, 1397, 1398 and 1399 (April -May 1891)

308. Editorial, *The Musical Standard* 1398 (16 May 1891)

There were several other interventions in the musical press during the late 1890s concerning the electric organ. Letters from Werner H. K. Soames, J. T. Bavin and Frederick Illingworth expressed the utmost satisfaction with their Hope-Jones instruments. Soames also gave detailed information on the size and life of the batteries.[309] It was the organ-builders, masquerading under pseudonyms, who dismissed electric action as unreliable and untrustworthy.

W. T. Best and John Stainer (1840-1901) had a conservative approach to technological development. Best preferred mechanical action, supported by the Barker lever as he judged it to be appropriate. For example, he recommended that 'the pneumatic touch be applied to the Great, Solo and Swell keyboards, but not to the Choir organ' for the 1872 instrument of Bolton Town Hall. Similarly, his advice as the design consultant to Brycesons for N. J. Holmes's chamber organ was, as we have seen, that the Great, Swell and Pedal claviers should include the Barker lever.[310] This organ had, therefore, a combination of mechanical, pneumatic lever and electric action, *vide* Section 4.8.2, page 264). Best however, was not a fan of electric action and had no time for the moveable console introduced by Robert Hope-Jones, saying that 'he plays organs at the end of a long rope which ought to be round his neck', and in a letter to A. G. Hill, 'a kind of sewer maker between pipe and key'. [311] Later on, Best was asked for his advice on the reinstallation of the N. J. Holmes organ in St. Benedict's Abbey, Fort Augustus. Best was not in good health so offered his apologies for not being able to visit the Abbey. Nevertheless he wrote with some sage advice which included 'If the action of the organ is worthless [the instrument having been allowed to decay since its removal from its second home at the Albert palace] and, as you are

---

309. Soames, Werner H. K., Musical Opinion 266 (1 November 1899), p.113-4. Apart from being an organist, Soames wrote religious books.
Bavin, J. T., *Ibid* p.114
Illingworth, Frederick, *ibid* p.114

310. Tebbet, Roger, D., 'W.T. Best and Organ Design' *Organists' Review* (May 2001), p. 119

311. Levien, J.J. M., *Impressions of W. T.Best* (London: 1942), p. 231
'W. T. Best: His Life, Character, and Works' *The Musical Quarterly* 4 (October 1918)

restricted in height,.....it may be worth consideration to employ the Electric Action throughout, but by no means that of Hope-Jones of B'head'.[312] Such was the north countryman's dislike of Hope-Jones that an invitation from George Miller to visit the St. John's Birkenhead organ (a short distance only from Liverpool) was rejected, saying that no good could come out of electric action. Indeed he was thoroughly acquainted with the attempts that had been made, and that he did not want to see any more electric organs.[313] It should be noted that Best could be equally critical of tubular pneumatic instruments. On one concert organ, Miller records him as saying 'It is a complete failure; you cannot play a triplet on the Trumpet, and I consider it the most damnable invention ever placed inside an organ'.

Sir John Stainer, in the 1889 edition of his *Dictionary of Musical Terms*, dismissed electric action in a paragraph of four lines as of no practical importance.[314] Considering that Stainer had 'signed off' the Canterbury Cathedral electric organ in glowing terms only three years before (no doubt for the usual consultant's fee), we must wonder about his intellectual honesty.

Gabriel Bédart, Professor of Physiology at the University of Lille during the first decade of the twentieth century, had translated George Laing Miller's book *The Recent Revolution in Organ building* of 1909 into the French tongue (probably in 1915). Bédart took the liberty of adding the following words to those that Miller wrote in his mini-biography of Peschard: [315]

---

312. Best, W. T., Letter to the Rev. Father Ould dated 17 March 1894, Scottish Catholic Archives, Edinburgh, Ref FA 34/22/2 (2)

313. Miller, George Laing, *The Recent Revolution in Organ Building* (New York: The Charles Francis press, 1909), p.

314. Stainer, John, *Dictionary of Musical Terms* (London: Vincent, 1889), p.

315. Bédart, Gabriël, translated, annotated and published George Laing Miller's book in 1915 or thereabouts. There is a copy in the GOArtCenter, Göteborg University.

Si Sir John Stainer et M. Best étaient allés à L'eglise St- Laurent de Salon, en 1889, ils auraient trouvé l'orgue construit par Peschard et Barker (donc le doyen des orgues électriques) fonctionnant sans interruption depuis 23 ans.

Does this suggest that the English organists did not accept an invitation to visit this, the first electric organ in the world?

In Canada, the firm of Casavant Frères had completed its first electric organ in 1892, based on the Barker-Peschard system but incorporating refinements derived from Roosevelt's work in the United States, as well as the brothers' own experience in Europe nearly twenty years before. This was the large three- clavier instrument for Ottawa Cathedral. Compared with the Schmoele & Mols and Hope-Jones horseshoe magnets, Casavant's were large, with a core diameter of 10 mm and a resistance of only 10 ohms. The power supply was made up of six Lalande & Chaperon cells wired in series to give a potential of 5.5-6.0 V.[316] In 1893, the brothers completed the electric organ for Montreal Cathedral. Alexandre Guilmant was invited to open the instrument in 1893, and afterwards he wrote to to Casavant:[316]

Montreal, 24 September 1893

Dear Messrs Casavant,

After leaving Montreal, allow me to express my pleasure at playing your new organ at St-Pierre's Cathedral. This instrument is one of the first order; the action is perfect and during my two recitals, I did not have a single problem, but on the contrary, I noted the precision with which it functioned. All the stops have a lovely sound and the full organ is powerful. All my sincere felicitations....etc.

Alex. Guilmant

316. Couture, Guillaume, 'l'Orgue Èlectrique au Canada': extracts from an article by Albert Peschard in *Le Monde Musical* (15 February 1893), pp.2-8 and from *La Presse* (30 September 1893), pp. 9-15, both re-published as a pamphlet by Casavant Frères.

It seems that critical comment on electric action technology throughout the last thirty years or so of the nineteenth century was solely related to technical and operational matters; such aspects as the loss of mechanical contact with the soundboard, attack and repetition-rate (issues that have interested many organists and builders over the last half century), are notable by their absence. Rather, the mechanical actions of the time were so inordinately bad in terms of heaviness and unreliability that any improvement, whether by tubular pneumatic or electric action, was worthwhile.

With so many musicians taking different views on the advantages and disadvantages of organ actions, there cannot be a convincing or even quantitative case to be made for the 'right' system for larger organs. There is too much individualism, perhaps too many entrenched positions. In reality, the issue was never a talking point in the nineteenth and early twentieth century, and not even the Schweitzer reform movement had a wide impact. This accounts for the paucity of published information and biographical material concerning the influential musicians of the day. There are no biographies, for example, of Best, Stainer, Hollins and other leading English organists.

Although commentaries made by organ virtuosi during the twentieth century are not directly relevant, a selection of such material is presented overleaf. These are by no means inclusive, but they do suggest a flavour of indifference that persists during the first half of the century.

Postscript – twentieth century

The most vociferous support for the value of direct contact between the player's fingers and the soundboard pallets had to wait until 1923, when Huré's book *L'esthetique de L'orgue* was published in France.[317] Huré was to take over the place of Gigout at St-Augustin in 1925. By then, Barker's electric action had long gone, it having been replaced in 1899 by Cavaillé-Coll's pneumatic lever, in spite of his son Gabriel Cavaillé-Coll's earlier plan for the restoration of the original action. Huré disliked tubular and electro-pneumatic actions because they gave the organ a flabby and inexpressive touch (*quelque chose de flasque et d'inexpressif*) that did not allow the individuality of the player to manifest itself. Huré gives a lengthy quotation from a letter written to him by Joseph Bonnet (1884-1944), a French recitalist and composer, who had just returned (in October 1919) from a tour of The United States and Canada. Having played many electric organs in the New World, Bonnet found fewer than two (*deux au moins*) organ-builders who constructed electric action instruments that allowed the possibility of playing in a clear, clean, expressive and lively manner. He agreed that electric transmission was instantaneous (*absolument instantanée*), but the real issue was the time that it took for the sound to be received by a player seated at a remote console (up to a *demi-seconde*). Huré felt that there were similarities between the nature of pianoforte action and that required for the organ. The pianoforte demanded muscular action for *une sonorité éclatante* just as did a mechanical four-clavier organ. He had played such instruments *au toucher pénible, fatigant, mais parfaitement expressif et infiniment sensible.*

317. Huré, Jean, *L'esthetique de l'orgue* (Paris: Editions Maurice Senart, 1923), pp. 54-5, and 208

Another French text, *L'orgue,* cited Cavaillé-Coll's reconstruction of the St-Augustin organ as *une acte déplorable de vandalisme* and *au regretté de maître Gigout.* There can be no doubt that its authors, Cellier and Buchelin, were supportive of technological development and disappointed that the organ-building industry took a conservative and traditional approach to new ideas.[318]

A web document produced by Yves Laot titled *L'orgue et l'électricité* gives some comments *(points de vue)* by distinguished French organists and composers.[319] Pierre Veerkamp noted that Cavaillé-Coll defended his position on electro-pneumatic action by preferring not to introduce new concepts, giving as an example God giving Eve a part of Adam, as he would give the transmission mechanism of an organ the same *entrailles* of the instrument. [320]

According to Veerkamp, Camille Saint-Saens said that 'one has the very clear impression of the presence of an intermediate agent in the transmission of the musical thought; one should believe oneself to be the ruler rather than the executor; because one cannot feel the precise instant of the sounding of the note. However, I have no reason to disqualify these types of transmission'.

Marie-Claire Alain: 'Even if I do not like it, I do recognise that electric action engenders another type of control of the clavier. This multiplicity of the instrument, its diversity is imposed on us, the organists of my generation, little by little'. Olivier Messien in responding to those critical of electric action: '*on dit ceci, on dit cela'*, but he electrified his organ at *La Trinité.* Lois Thiry: 'in playing electric organs, I have a little impression that I am operating switches'.

---

318. Cellier, Alexandre, and Buchelin, Henri, *L'orgue* (Paris: Delgrave, 1933), pp. 212-214

319. Veerkamp, Pierre, *L'orgue à Tuyaux* (Paris: T. van Eck et V. Timmer, 1986)

320. http://perso.club-internet.fr/yveslaot/orgues-eure/orgue-electricite.htm

Marcel Dupré (1886-1971), arguably the leading French organist-composer of the inter war period, took a pragmatic view on the use of electricity. Although he was brought up in the Cavaillé-Coll tradition, being taught by Widor, Guilmant and Vierne, his recital tours in the North American continent surprised and captivated him by the use to which electricity had been put. In 1924 (only five years after Bonnet's negative comments on electric action), he was to express the view that the reliability of the action, the easy console management and the new sounds from the introduction of high wind pressures presented the opportunity for 'a new artistic formula in modern orchestral colouring without losing the dignity of the instrument'.[321]

Cavaillé-Coll could not have foreseen that only thirty years after his death, the firm would be building electric organs for the Paris theatres. Dupré praised the firm's last organ, (built in 1930): 'The electric action is absolutely instantaneous, the attack is precise and gentle and the adjustable combinations are quick and reliable'.[322] There has also recently been a powerful reaction to the use of tracker action for the larger instruments in Britain. The realisation that pneumatic and even electrical aids have been found to be necessary for the lower notes, detracts from the purity of the argument for direct physical contact. Neither is the key pressure, when the claviers are coupled, always to be desired, especially when higher wind pressures for eclectic designs are required. The argument for a detachment of the console in obtaining a balanced hearing for the player is not only well appreciated, but accepted, whilst the desire for rapid and reliable stop control with full registration aids in the playing of post-baroque music demands an electrical intervention.

---

321. Murray, Michael, *French Masters of the Organ* (Newhaven and London: Yale University Press, 1998), p.149-150

322. Douglass, Fenner, *Cavaillé-Coll and the French Romantic Tradition* (Newhaven and London: Yale University Press,1999). p.144

Recently, C. E. Pykett has presented experimental work on the attack and decay times of electro-pneumatic and direct electric actions, showing that the two systems could perform similarly.[323] More importantly, he provided convincing evidence that both systems could work faster than any player could require. In 2002, Paul Hale discussed whether mechanical action could really provide all that was asked of it for larger organs,[324] and in 2004, preliminary results of a scientific investigation at Edinburgh University into the connection between the key and pallet of a mechanical action were published.[325] Another eminent organist, Geoffrey Morgan has made a telling argument for electric action, citing a dual-mechanism organ (probably Bridgewater Hall, Manchester) where in over 100 lunchtime and evening recitals, the electric action console was preferred, with only two recitalists asking to play the mechanical action. [326]

323. Pykett, C. E., *Response speed of Electric Actions* (22 October 2001) http://pykett.org.uk/response_speed_of_electric_actions.htm

324. Hale, Paul, 'A Stick too far?', *Organists' Review* (May 2002), p. 104
Hale, Paul, "Too much of a Good Thing? *The Institute of British Organ Building Newsletter* 27 (September 2002), p.6-8

325. Woolley, Alan, 'Mechanical Pipe Organ Actions, and their Interface with the Player', *The Institute of British Organ Building Newsletter* 34 (June 2004), pp. 6-9

326. Morgan, Geoffrey D., *The Institute of British Organ Building Newsletter* 34 (June 2004), p.1

6. AN EVALUATION OF BRYCESONS' ROLE IN THE DEVELOPMENT OF THE PESCHARD-BARKER SYSTEM AND NINETEENTH CENTURY ORGAN TECHNOLOGY IN BRITAIN

An early outcome of Volta's primary cell of 1800 and Sturgeon's electromagnet of 1825 was the start of commercialisation of the electric telegraph in the 1840s. The first cable between France and Britain was laid in 1851 and one year later, the grant of Stein's prophetic direct action electric patent for pipe-organs was followed by Gauntlett's grandiose concept for coupling the leading church organs of London to one console. By 1855, Pierre Stein was in a position to exhibit an electric action instrument at the Paris international exhibition of that year.

So, the almost instantaneous transmission of events, ideas, scandal and stock exchange dealings, an invention of communication that was to become of untold value to the world, was closely shadowed by another, but perhaps more mundane, system of instantaneous communication: that between an organist and his instrument. One cannot but wonder today at such an early meeting of bright new technology and traditional old fashioned organ-building. But entrepreneurs do not have the zeal for risk-taking or the dreams of the Victorian scientists and engineers, constrained as they are today by the clutter of regulation and need for accountability.

There has frequently been debate over who really made an invention. Who actually invented the electric telegraph, the telephone, or television? Was Hamilton really the inventor of the pneumatic lever, or was it Booth or Barker? Schmoele & Mols, two US citizens domiciled in Belgium with French electric action patents of 1881 were given the credit for inventing the electric organ in the late 1880s, thanks to Merklin's commercial exploitation of the technology. Peschard issued a pamphlet *L'orgue électrique n'est pas d'origine américaine* in 1892, to deny the story and stake his claim for posterity.[327] Perhaps a study

---

327. Peschard, Albert, *L'orgue électrique n'est pas d'origine américaine*

of Soviet scientific discovery will demonstrate the earliest claim for electric action – amongst most other advances in technology. The innovation of tubular-pneumatic clavier action is a similar example: there are several British patents claiming inventions for this type of action taken out in the latter part of the century. As Hinton was to remark, with some acerbity, turning the drawing of one patented action upside down merely showed the patent action of another inventor. Hinton was, however, a writer that gave the credit for the invention of electric action to Peschard.

A principal objective of my thesis is to bring light to bear on who really invented practical systems, the role of the Bryceson brothers in Britain, and to establish a chronology for the development of electric action in the nineteenth century. The technical objectives of this work include an evaluation of the limitations set by the available power supplies and electromagnets of the time.

Invention - Phase I (1852-1855)

Perhaps as a curiosity, Froment adapted his twin clavier telegraph sending station to strike an octave or so of tuning forks, although he thought it of enough interest to show the polite but disinterested Cavaillé-Coll. The eminent French historian, M. le Vte Theodore du Moncel also noted early attempts to use electromagnets for the striking of pianoforte strings.

The first electric action patent for the pipe-organ was granted to Pierre Stein in 1852. The logic of the design principles, the quality of the scaled drawings, and the detailed exposition of the specification together with his entry of a demonstration instrument at the Paris exhibition have convinced me that Stein, a Parisian whose only other claim to fame was that of a reed organ manufacturer, was the inventor of a practical electric organ that used electricity not only for the clavier action, but for stop control, electro-pneumatic swell shutter movement and a primitive electric motor for the operation of the feeder bellows. We may express doubts about the adequacy of the battery power supply he had available, but the engineering principles were entirely valid.

A lasting monument to his achievement lies in the use of direct electric clavier action as a player's option to the traditional mechanical system for several large organs built in the decade or so. The driving force was desire for the moveable, on view, console (shades of Robert Hope-Jones?). The extent to which the moveable console of new organs in our concert halls is used by recitalists suggests that the tracker action console is an expensive and anachronistic adjunct.

Invention – Phase II (1860 – 1867)

Peschard's experiments from 1860 and his relationship with Barker that led to the first electric organ at Salon must be one of the more fascinating interludes in nineteenth-century organ history. Whatever historians have said about Barker and Hamilton and the ownership of the pneumatic lever principle,[328] we may now suppose that, once again, Bryceson's seminal paper to the Society of Arts at which he recounted Barker's attempted intervention with Camidge at York Cathedral and his entirely successful remedial action with the St-Denis organ in Paris stimulated the response by Messrs D. & T. Hamilton that attributed the invention of the pneumatic lever to 'the late Mr. D. Hamilton'.[329] The implication that Barker may have been devious in claiming (and patenting) the lever as his own invention cannot be substantiated and indeed there is no evidence to suggest that the work of Barker and Hamilton was other than unconnected coincidence. Henry Bryceson firmly refuted Messrs Hamiltons' charges in a subsequent letter.[330]

It is an entirely different case with Barker and Peschard. It is clear in the Peschard-Barker correspondence of 1861 that Peschard introduced Barker to the practical reality of electric action. Thereafter, in spite of the outward signs of collaboration, there was an independence of patent applications that suggests an ambition by Barker to be the first to take credit for electric action

---

328. Letter to the Editor from Messrs D. & T. Hamilton, *The Musical Standard* 234 (23 January 1869), p. 41
329. W. H. Sumner, *The Organ* (London: Macdonald, 1952), p. 221, 'Hamilton is the real inventor of the pneumatic lever'.
330. Bryceson, Henry, *The Musical Standard* 236 (6 February 1869), p. 64

and thereby attain the financial reward at the expense of Peschard.

The following seems to be the order of events (although discussed earlier, its importance justifies reiteration):

1. Barker takes out a patent for his *pneumato-électrique* action on 24 October 1862.

2. On 8 November 1862, Barker adds a *certificat d'addition* covering direct electric action using the *balancier* principle.

3. Peschard takes out a patent on 12 November 1862 that completely describes the Barker *balancier* principle expressed in his 8 November submission.

4. 13 April 1863 sees a further patent by Peschard, this time describing direct electric action methodology.

5. Finally, we see a *certificat d'addition* by Peschard in 6 June 1864 reiterating the direct roller action principle, but with a final 'insurance policy clause' that describes the *pneumato-électrique* system described in Barker's 1862 patent.

What today's corporate patent agent charged with the task of safeguarding his company's know-how would think of this uncoordinated *mélange* of patent activity we can but surmise, but we may be sure that Barker was not above a degree of deviousness designed to maximise reward and status. We also recollect that no mention of Peschard's involvement was made in Bryceson's paper to the Society of Arts, making me believe that Barker had himself not mentioned the Frenchman's important contribution.

The outcome of the Phase II technology was the construction of the organs for Salon de Provence (1866), St-Augustin (1868), St-Pierre de Montrouge (1869) and an incompleted order for St-François de Xavier, the latter three

churches in Paris. The technology was typified by large electromagnets and single pneumatic motors with the exception, based on the experience of the St-Augustin organ, of the St-Pierre de Montrose instrument, which had two pneumatic motors in series.

In 1867, Barker and the Bryceson brothers negotiated a licence of the Phase II technology for the British market. The ensuing Baker patent was clearly an upgrade of his 1862 patent as the design of the magnet assembly had moved away from the easily replaceable brass disc valve assembly. I believe that the brass unit with its powerful magnet was probably used for the Salon organ, but that the other two French organs used the design shewn in the 1868 British patent, and which was used by Bryceson for the series of organs he built in Britain during the period 1868-1876.

In 1870, Barker returned to Britain (Ireland) following the destruction of his workshop and the organ of St-Pierre de Montrouge by enemy action during the Franco-German war. Further development and construction of electric organs in France had to await the licensing of the Schmoele & Mols patent to Merklin In the 1880s. What would have happened but for the destruction wrought by the war? I conclude that Barker would have stayed in France, fully resolved the commissioning challenges that plagued the early years of the St-Augustin organ (not all related to the electric action) and maintained a growing trend of organ construction that would have provided a seamless introduction of the low energy technology pioneered by the Schmoele & Mols system, or more likely a second generation Peschard-Barker system. (Peschard, perhaps with the benefit of hindsight, was later to claim that he was the true inventor of the Schmoele & Mols concept).

In later years, Peschard never expressed disappointment at the unfair treatment he was subjected to by Barker; rather he openly vowed his belief in Barker as a highly talented organ-builder. Perhaps we would expect no less from an equally talented musician and physicist.

Invention - Phase III (1881-1890)

The French patent of the two American citizens based in Antwerp, Schmoele & Mols, described a system that overcame the need for the powerful batteries demanded by the Phase II technology. By using two or three pneumatic motors in series, each electromagnet needed to draw less than 0.1 A. By the time Robert Hope-Jones had introduced his patented system, he could claim that his magnets drew only 50 mA. The two or three pneumatic motor system formed the basis of most British electro-pneumatic organs through the twentieth century. Nevertheless, the battery life problem remained a real issue, and a reliable, adequate power supply had to await the widespread availability of mains electricity and the somewhat tardy introduction of direct current rectification equipment.

Electromagnets

By and large, I am convinced that electromagnet technology as early as the 1850s was adequate for the duty imposed by both direct electric and electro-pneumatic actions. Even the single coil magnet that Stein might have used for his 1855 demonstration organ with its direct action to the pallets was 'fit for purpose', albeit with a high current consumption. The horseshoe magnet as the Wolfson Centre for Magnetics Technology software demonstrated, is a far more efficient user of electrical power, and with but a few exceptions (e.g. Benay's patent of 1870) this was the magnet of choice from the 1860s onwards.

The Barker magnets described in his 1862 patent would have been immensely powerful - and expensive - for the duty of disc valve opening. But then such a 'belt and braces' approach was a common trait exhibited by Victorian engineers. My calculations show (*vide* Appendix V) that the force needed to open a Barker disc valve against a wind pressure of 70 mm (2 3/4 in) is 60-65 g after allowing 45 g for the mass of the two valves, the operating rod and the magnet armature. In comparison, the force necessary

for a direct action pallet is around 485 g at the same wind pressure. The use of the lighter materials of construction that are available today for the valve and the operating rod would reduce the force needed to open the disc valve to the equivalent of 30-35 g. The force needed for to operate the very light and tiny valves of the Schmoele & Mols and Hope-Jones era is less than 5 g. Now we can understand why the latter's magnet only consumed 50 mA.

The real challenge to battery-powered systems was the batteries themselves.

Batteries

Whilst it is generally known that batteries posed real challenges at least until the introduction of the phase III technology electric action technology, the view has been taken that the various types of battery in use were simply not powerful enough to provide the requisite current. This may have been the case for the battery systems that Gauntlett and Goundry had in mind for their proposals, but there is no doubt that the Bunsen and bichromate cells were intrinsically capable of working three manual clavier instruments.

First, we must consider how much energy is needed to operate a substantial instrument where the player would certainly wish to take advantage of the coupling opportunities that were available on moderate-to-large organs from the mid-nineteenth century onwards. From a design aspect, what is the likely maximum load? The depression of ten fingers and two feet at the same time is perhaps an extreme case, but chords requiring the use of seven fingers and a foot are occasionally to be found in the cadence bars of the more powerful Bach works. Karg-Elert's Choral-Improvisation (Op. 65, No. 59) has chords of nine notes for the hands and no doubt other examples of 'fistfuls' of notes can be found. The load on the power supply rapidly escalates when the manual claviers are coupled, and not least when the pedal clavier couplers and sub- and super-octave couplers are drawn. So, three manual clavier notes and a pedal note coupled up to the manual clavier make use of five magnets for playing over a four part hymn tune, whilst the Choral-Improvisation, played on an instrument with all three manual claviers and the pedal clavier coupled up requires a power supply capable of operating at least 31 magnets.

A safe design basis for the power supply of a large electro-pneumatic organ with Phase II technology magnets drawing up to 0.2 A (say Barker's St-Augustin organ of 1868), is therefore 10 A, with 6 A actually drawn at full load.

The results of my experimental work on a pilot scale bichromate cell (*vide* Appendix V) demonstrate that the twin cell supply of the size deduced from Barker's British patent of 1868 could deliver 30 A at around 1 V (open circuit potential 2 V) for a period of around one hour. Thereafter the electrolyte would have been irreversibly degraded. Clearly, battery life would be usefully prolonged if Karg-Elert's Choral-Improvisation were to be banished from the repertoire.

The battery challenge was therefore one of longevity rather than instantaneous output. Barker and the Brycesons were astute enough to realise this, and to be aware of the answer to short battery life: a high electrolyte capacity. The cell jars shewn in Barker's 1868 patent are deduced to have an electrolyte capacity of 7 litres (1.5 gal), say 8.5 kg (19lb). The mass of the earthenware jar was probably 4kg (1.8lb), so the overall weight of a cell (excluding the electrode array and the security jar) was 12-13 kg (26-29 lb). The description of the batteries of the Bryceson organ at Fort Augustus, Scotland (previously at N. J. Holmes' residence in Regent's Park), as washhouse boilers no longer seems so exaggerated. Indeed the cells must have been a substantial piece of equipment for transportation, mounting and maintenance in what was almost certainly a cramped space. Nevertheless, an even larger battery might have gone some way towards mitigating the concerns expressed by the purchasers of his electric instruments.

Hope-Jones' electric action drawing only 50 mA per magnet operated with a very much smaller power supply. His claim at the College of Organists meeting in 1891 that a single dry cell (identical in principle to the ubiquitous Leclanché dry cell used today), could power his organ, was grossly exaggerated, but a pack of four dry cells connected in series as used in telephonic communications well into the sixties could easily cope with an

average current draw equivalent to10 magnets for a long period of time. [331]

The problem with the use of primary cells was the very limited warning that the battery needed maintenance. Whilst the magnet action would become sluggish as the available current fell away, the organ would catastrophically fail once the claviers were coupled or large chords were attempted. The Brycesons fitted a galvanometer at the console, but apart from an essentially qualitative indicator for the emf of the battery, it was of little help in warning of an impending failure; ammeters, a more meaningful indicator of battery performance during load conditions, were not available in the 1860s. British organ-builders in the late 1880s onwards used wet Leclanché cells or secondary lead batteries that were recharged from a dynamo coupled to the wind fan shaft. It has to be said that most builders remained suspicious of electric action until the advent of reliable mains electricity. Certainly, the Bycecsons only recommended electric action when there was a pressing need for a detached console. Unlike Hope-Jones' demonstration console, that was on wheels so that it could be placed outside his church.

The Bryceson Brothers' influence on organ-building

The supreme achievement of the Byceson brothers was their pioneering work in the introduction of the Peschard-Barker technology into British organ-building in 1868. At least ten electric organs are attributed to the firm during the period 1868-1885. No other builder is known to have essayed electric action until Willis put up the Canterbury Cathedral organ in 1886, and it was, in essence, the Peschard-Barker system that he used. As we know, this action, with its mercury key contacts and large magnets remained in place until 1939. Although Hope-Jones implied that he knew nothing of Bryceson's work, I venture to suggest that this was untrue and that his dedication to the deployment of electric action stemming from his work as a telephone engineer must have been catalysed by an awareness of Byceson instruments and, indeed, a knowledge of the power supply challenges faced by the brothers.

---

331. Soames, Werner H. K., *The Musical Standard* 266 (1 November 1899), p.113-4

Henry Bryceson's prescience in identifying electric action as a valuable tool for the larger instruments of the second half of the century, the rapidity with which he concluded a licence agreement with Barker, and the short period that was to elapse before his first instrument was built and successfully commissioned, is striking. It was all done within the space of a year. Within a further four years (1868 -1872) he had built another five organs. Four more organs were constructed over a much longer period (1876-1885). We must assume that battery life deficiencies were well-known by the early 1870s.

Henry and John Bryceson not only introduced the Peschard-Barker technology into Britain but also patented their own improvements, principally a simpler and more effective electro-pneumatic draw stop system than that of Barker. We have seen that the Brycesons also innovated an ingenious pneumatic pallet that integrated the conventional mechanical pallet and the Barker lever into a single unit, and other developments that fell outside electric action have already been discussed.

Why is it then that the Brycesons firm's contribution to organ-building in the second half of the century was not adequately noted by its contemporaries or by twentieth-century historians? For Henry Bryceson's contemporaries, he was an educated man, seen as an intellectual rather than the tradesman/carpenter that the others mostly were. He travelled to foreign parts and spoke other tongues. He earned no brownie points from his competitors. The firm built large organs – Brighton, Cork, Paisley, Regent's Park. But today, only Cork remains as an intrinsically Bryceson instrument, presently looked after by the Shepherd Brothers. Brighton was burned down after a short life. N. J. Holmes' Regent's Park organ, all 87 tonnes of it, was transferred from pillar to post and its 32 ft open metal pipes cut-up for scrap.

Perhaps, the Brycesons biggest achievement, electric action, became an un-respected technology after WW II with the introduction of neo-classic instruments and at a time when mechanical action was - and is - the only system approved by the cogniscenti. Even in the first two decades of the

twentieth-century, with mains electricity distribution rapidly expanding, organ-builders fought shy of electric action. Worse, many stories circulated about the failures of electric organs, most of which emanated from faults having no relation to the electrical systems. The mere fact that the organ blower was in dereliction of his duty was sufficient to criticise the action of the Bryceson Brothers organ at St. Michael's, Cornhill.[332]

Perhaps the leadership roles that we have assigned to 'Father' Willis and William Hill have by now eclipsed the valuable contribution of the Bryceson family dynasty. We can be sure that historical analyses of nineteenth century organ-builders are still sparse and that there is much more to discover about this epoch.

Electric action today

In my view, there is now a compelling case for a thorough re-examination of direct electric action as a cost effective system for the majority of new organs. The ancient limitations of inadequate power supply, unreliable contact design, sparking and contact oxidation, noise, high inertia of the mechanical connection between the electromagnet and the pallet, slow response and release times, short equipment life, have all been eliminated. The Wickes Organ Company has shown the way for unit pipe systems in the United States. What is now needed is a professional design approach for a direct action slider soundboard that is able to demonstrate prompt response, consistency and reliability of operation, and, with these qualities, a cost effectiveness that could play a small but significant role in maintaining the pipe-organ as the instrument of choice. Regrettably, organ-builders of this generation seem to have lost the zest for technical innovation, and the use of state-of-the art materials of construction. Pipe-organ patent activity peaked in the late 1880s and then declined rapidly; not so with science and engineering. Are British organ-builders frightened of their own shadows?

---

332. Discussion following Henry Bryceson's presentation to the Society of Arts on 23 December 1868, *J. Soc. Arts* 840 (25 December 1868), p. 8

7. BIBLIOGRAPHY

Abdy Williams, C. F., *The Story of the Organ* (London: The Walter Scott Publishing Co., 1903)

Andersen, Poul-Gerhard, *Organ Building and Design* (Copenhagen: George Allen and Unwin Ltd., 1969)

Archbold, Lawrence & Peterson, William J., *French Organ Music from the Revolution to Franck and Widor* (New York: University of Rochester Press, 1995)

Audsley, George Ashdown, *The Art of Organ-Building,* 2 Vols. (New York: Dodd, Mead, and Company, New York, 1905, reprinted Dover Publications Inc, NY, 1965)

Barker, C. S., *Réponse au mémoire de M. Peschard sur L'Application de l'électricite aux grandes orgues* (Dieppe: Imprimerie D'Ēmile Delevoye, 1865)

Bedwell, G. C., *The Evolution of the Organ* (London: William Rider & Son,1907)

Bicknell, Stephen, *The History of the English Organ* (Cambridge: CUP, 1996)

Bonavia–Hunt, Noel A, *The Church Organ,* Church Music Monographs No 2, (London: The Faith Press Ltd., 1920)

British Organ Archive, the Bryceson file, Birmingham Central Library

Boston, Noel and Langwill, Lyndsay G, *Church and Chamber Barrel–Organs* (Edinburgh: Lyndsay G. Langwill, 1967)

Cellier, Alexandre, et Buchelin, Henri, *L'orgue* (Paris: Librairie Delagrave, 1933)

Clark, Relf, *Robert Hope–Jones, MIEE, an Interim Account of his Work in the British Isles,* University of Reading, PhD Thesis, 1993

Clutton, Cecil, and Niland, Austin, *The British Organ* (London: B. T. Batsford Ltd., 1963)

Davidson, Hilary, *Choirs, Bands and Organs* (Oxford: Positif Press, 2003)

Dieterlen, Michel, *L'harmonium* (Villeneuve d'Ascq: Presses Universitaires du Septentrion, 1996)

Douglass, Fenner, *Cavaillé-Coll and the French Romantic Tradition* (Yale: Yale University Press, 1999)

Du Moncel, Theodore Achille Louis, Comte, *Éxposé des Applications de L'Électricité* (Paris: 1856-1862)

Edwards, C.A., *Organs and Organ building* (London: 'The Bazaar' Office, 1881)

Ellison, Thomas, *Organs and Tuning* (London: Weekes & Co.,1911)

Elvin, Laurence, *Bishop and Son, Organ Builders* (Lincoln: Elvin 1984)

Fidom, Hans, *Diversity in Unity: Discussions on Organ Building in Germany between 1880 and 1918,* The Free University Amsterdam, PhD Thesis, 2002

Fleury, Le Comte Paul de, *Dictionnaire biographique des facteurs d'orgues* (Paris: office Général de la Musique, 1918)

Fox, David, *Robert Hope-Jones* (Richmond, Virginia: The Organ Historical Society, 1992)

Gaultier, Roland, *les facteurs d'orgues en France de 1800 à 1870* (Villeneuve d'Ascq: Presses Universitaire du Septentrion, 1997)

Goodrich, Wallace, *The Organ in France, a Study of its Mechanical Construction, Tonal Characteristics and literature etc.* (Boston: The Boston Music Company, 1917)

Grove's Dictionary of Music and Musicians (London: Macmillan and Co, 1/1879, 2/1904, 3/1927, 3/1927, 4/1904, 5/1954)

The New Grove Dictionary of Music and Musicians (London: Macmillan and Co Ltd., 1/1980, 2/2000)

Hemsley, J.D.C., *The Role of Patents in the Development of the Victorian Organ*, University of Reading MA Dissertation 2001

Hiles, John, *Catechism of the Organ* (London: S. J. Brewer & Co., 3/1890)

Hinton, J.W., *Organ Construction* (London: Weekes and Co., 3/1910)

Hinton, J.W., *Story of the Electric Organ* (London: Simkin, Marshall, Hamilton, Kent & Co., Ltd., 1909)

Hopkins, Edward J. & Rimbault, Edward F., *The Organ, its History and Construction* (London: Robert Cock & Co, 3/1877)

Huré Jean, *L'esthetique de L'orgue* (Paris: Editions Maurice Senart, 1923)

International Genealogical Index/British Isles, The Church of Jesus Christ of Latter-Day Saints. www.familysearch.com

Verne, Jules, *Vingt mille ligues sous les mers* transl. Walter James Miller (Annapolis: Naval press, 1993)

Joy, Charles R., *Music in the life of Albert Schweitzer* (London: Adam and Charles Black, 1953)

Knott, J. R., *Brindley & Foster Organ builders* (Sheffield: J. R. Knott, 1985)

Lahee, Henry C., *The Organ and its Masters* (Boston: L. C. Page & Co., 1902)

Langbein, George, *A Complete Treatise on the Electro-Deposition of Metals* (Philadelphia: Henry Carey Baird & Co., 1901)

Lewis, Walter & Thomas, *Modern Organ Building* (London: William Reeves, London, 1939

Mantell, C. L., *Industrial Electrochemistry* (New York: McGraw-Hill, 1950)

Marshall, Percival, *Small Accumulators, how made and used. An Elementary Treatise on Electric batteries* (London: The Model Engineer, 1899)

Matthews, J., *The Study of Organ Building* (London: Augener, 1897)

McMillan, Walter G., *A Treatise on Electro-Metallurgy* (London: Charles Griffin & Co., 1890)

Miller, George Laing, *The Recent Revolution in Organ building* (New York: Charles Francis Press, 2/1913)

Murray, Michael, French Masters of the Organ (Yale: Yale University Press, 1985)

Niaudet, Alfred, *Elementary Treatise on Electric Batteries* (New York: J. Wiley & Sons, 1886)

National Pipe Organ Register, http;//lehuray2.csi.cam.ac.uk

Ochse, Orpha, *Organists and Organ Playing in Nineteenth-Century France and Belgium* (Bloomington & Indianapolis: Indiana University Press, 1994)

Ord–Hume, A. W .J .G., *The Story of the Mechanical Organ and its Repair* (London: George Allen & Unwin, 1978)

Peschard, Albert, L'*Application de l'électricité aux grandes orgues* (Caen: Le Blanc-Hardel, 1865)

Peschard, Albert, *Les premieres applications de l'électricité aux grandes orgues* (Paris: Imprimerie Larousse, 1890)

Peschard, Albert, *Études sur l'orgue électrique: perfectionnements au système électro-pneumatic* (Paris: Larousse, 1896)

Plumley, Nicholas M., *The Organs of the City of London* (Oxford: Positif Press, 1996)

Pole, William, *Musical Instruments in the Great Industrial Exhibition of 1851* (London: R. Folkard, 1851)

Robertson, F.E., *A Practical Treatise on Organ building* (London: Sampson Low, Marston & Company, 1897)

Roosevelt, Hilborne L., *Hilborne L. Roosevelt Manufacturer of Church, Chapel, Concert and Chamber organs*, unabridged republication of the original December 1888 brochure (Braintree, Mass.:The Organ Literature Foundation *c.* 1946)

Rupp, Emile, *Die Entwicklungsgeschichte der Orgelbaukunst* (Strasburg: Benziger & Co. A-G., 1929)

Rushworth, G. D., *Historic Organs of New South Wales* (Sidney: Hale Iremonger, 1988)

Seaver, George, *Albert Schweitzer The Man and His Mind* (London: Adam and Charles Black, 1948)

Schweitzer, Albert, *J.S Bach,* 2 vols (London: Adam & Charles Black, 1923)

Stainer, John, Novello's Music Primer No.3 *The Organ* (London: Novello & Co., 1899)

Sumner, William Leslie, *The Organ* (London: Macdonald, 1/1952)

Sumner, W.L., *Father Henry Willis* (London: Musical Opinion Ltd., 1956)

Sutton, F.H., *Church Organs: their Position and Construction* reprint (London: Positif Press, 1998)

Thistlethwaite, Nicholas, *The Making of the Victorian Organ* (Cambridge: CUP, 1990)

Tuck, Clive D. S., *Modern Battery technology* (New York: Ellis Horwood, 1991)

Urquhart, John W., *Electric Light* (London: Crosby, Lockwood & Co., 1880)

Wangemann, F.D.H., *Orgel und Der Orgelbaukunst* (Demmin: A. Frantz, 1881)

Watt, Alexander, *Electro-Deposition* (London: Crosby Lockwood and Son, 1889)

Wedgewood, J. I., *Dictionary of Organ Stops* (London: Vincent Music Co., 1907)

Wigley, Thomas B., *The Art of the Goldsmith and Jeweller* (London: Charles Griffin and Co. Ltd., 1898)

Williams, Peter, and Owen, Barbara, *The Organ* (London: Macmillan, 1998)

Wilson, M., *The English Chamber Organ* (Oxford: Casirer, 1968)

Wilson, Michael I., *The Chamber Organ in Britain, 1600-1830* (Aldershot: Ashgate, 2/2001)

Whitworth, Reginald, *The Electric Organ* (London: Musical Opinion Ltd., 1948)

Wooley , Alan G., *Actions and Reactions*, University of Reading Dissertation MA Dissertation 2000

APPENDIX I

BIOGRAPHIES

1. Peschard, Louis Charles Albert, Dr

Louis Charles Albert Peschard was born on 24 July 1836, and died in Caen on 23 December 1903.[333]

Peschard held a University degree in Law (*Docteur en Droit*), became a teacher of physics at the lycée,[334] and from 1857 until 1875 held the appointment of organist to the Church of St-Etienne, Caen.[335]

There are two major churches in Caen, the Parish Church of St-Etienne which was extensively damaged in World War II and is out of use, and the Abbaye aux Hommes whose patron is also St-Etienne. The Abbey Church had a massive organ of *'cinq claviers et pédalier' and 'soixantaine de jeux'* built by Lefebvre in 1737-1745. Peschard used an instrument of this description for his experiments with electromagnets from 1860 onwards, so we may assume that he was the organist of the Abbey rather than the Parish church.

The Abbey organ was rebuilt by Cavaillé-Coll in 1884 as a three clavier instrument of 50 stops[336]. The heavy clavier touch that had catalysed Peschard's experiments with electromagnets was at last resolved with the installation of a pair of Barker machines.

---

333. Hinton, J. W., *Story* p. 27. A French Directory *Biographie Normande, Deuxieme Supplement* (Paris: Ernest Dumont, 1912), p. 368 gives 19 December 1902. Since Hinton met and conversed with Peschard, I am assuming that he is more likely to be correct.

334. Douglass, Fenner, *Cavaillé-Coll, and the French Romantic Tradition* (Newhaven: YUP, 1999), p.144

335. Peschard, Albert, *Les premieres applications de l'électricité aux grandes orgues* (Paris : Imprimerie Larousse, 1890), p. 22.

336. Penny, Martin, G., *Organ of the Abbey church of St Etienne, Caen,* www.geocities.com/Vienna/Strasse/4848/ccstetcn.htm

Patents

Brevet d'Invention (15 years) No 56854, 12 November 1862
'pour un orgue électrique'

No 58344, 13 April 1863
'pour l'application de l'électricité à l'orgue et l'application de systèmesparticuliers l'électroaimant destiné à l'abaissement des soupapes l'orgues'.

No 58344, 6 June 1864
Certificat d'addition

All three documents spell the inventor's name as 'Pechard'. The writing, appears to be in Peschard's hand, but the signature at the end of each document is also spelt 'Pechard'. All the documents exhibit similar handwriting and are heavily annotated by the examiner, so I conclude that Peschard, possibly an Alsation name, changed the spelling of his name at some time in the early sixties (see also below) and that he changed it back after 1864. Why he should have done this is a mystery.

Publications

Application de l'électricité aux grandes orgues (Caen: TYP.F Le Blanc-Hardel, Imprimeur-Libraire, 1865).

Les premières applications de l'électricité aux grandes orgues (Paris:Imprimerie Larousse, 1890).

Notice biographique sur Cavaillé-Coll et les orgues électriques (Paris:1899), reprinted in *La Flûte Harmonique* 18 (Paris: 1981), pp. 10-26.

L'Orgue électrique n'est pas d'origine américaine (Paris: July 1892), unpublished MS in Bib. Nat., pièce 8^0 V 9228.

Études sur L'orgue électrique: perfectionnements au système électro-pneumatic (Paris: Larousse, 1896).

Awards[337]

Medal of Merit, The Netherlands, 1900

Medal of L'Association Française pour L'Avancement de la Science

Gold Medal, Exhibition of Lyon (Enseignement et Arts Liberaux)

Gold Medal, Exhibition of Bordeaux (Enseignment Superieur)

337. Hinton, J. W. *The story*, pp. 27-28 lists these awards as does de Fleury, Paul, *Dictionnaire biographique des facteurs d'orgues* (Paris: Office générale de la musique, 1918), pp.163-4



The eighteenth-century *Grande orgue* case by Lefebvre at l'Abbaye aux Hommes, Caen

Built during 1737-1745 as a five clavier instrument of 60 stops. Rebuilt by Cavaillé-Coll with three claviers and 50 stops, with a *machine Barker* replacing the ancient and heavy tracker action that Peschard had to cope with, and on which he commenced his electric action experiments in 1860.
(source: www.organfocus.com/features/sights-and-sounds/images/caen/caen2.jpg)

2. Barker, Charles Spackman

According to the International Genealogical Index, Charles Spackman Barker was born in Bath, Somerset on 10 October 1804. Hinton gives a birth date of 10 October 1806, as does Meyrick Roberts[338] (although misspelling his second name as 'Speckman'), and Fenner Douglass.[339] The French Ministry of Culture website[340] relating to Cavaillé-Coll offers 7 January 1807. R. W. M. Wright, in a letter to *The Organ* correcting Robert's misspelling, said that the birth date was 7 January 1805.[341] At this time, the International Genealogical Index maintained by the Church of Latter Day Saints, which is based on parish record research, is assumed to be the most reliable. Spackman, his second Christian name, is a well-established family name in and around Cliffe Pypard in nearby Wiltshire, but no genealogical connection has yet been discovered.

According to Hinton, his father, Joseph Barker, an artist, died when the boy Charles was only five years old, and he was then brought up by his godfather. The father's death date of 1809 is recorded in *The Barkers of Bath.*[342] After leaving school, he became an apothecary and chemist's assistant in Bath.[343] Not content or indeed happy with helping his master to pull teeth, he left before he was 'out of his time', and went to London where he seems to have been employed by an organ-builder, as yet unnamed. He returned to Bath in 1830 after being only two years away, setting himself as an organ-builder, prompting Hinton to ask the question 'how could Barker have gained enough experience in the space of two years?' Hinton's chronology of these events in Barker's youthful life is sparse, so I suggest the following dates of the key events, which are more related to the typical school-leaving age of the time and the full term of an apprenticeship of seven years:

---

338. Roberts, R. Meyrick, 'Charles Speckman Barker', *The Organ* 51 (January 1934), pp.186-187

339. Douglass, Fenner, *Cavaille-Coll and the French Romantic Tradition* (New Haven: Yale N.P., 1999), p.17

340. French Ministry of Culture web site www.culture/cavaille-coll/en/bas_barker.html

341. Wright, Reginald. W. M., 'Letters to the Editor', *The Organ* 54 (October 1934)

342. *The Barkers of Bath* (Bath Museums Service: 1986)

343. Hinton, *Story*, p. 35

Date	Age	Event
1804		birth date
1817	13	leaves school for apprenticeship with apothecary
1821	17	gives up apprenticeship early, leaves to work for a London organ-builder
1830	26	returns to Bath and sets-up as an organ-builder

We may now see that Barker could have been learning the trade in London for as long as nine years. Hinton's error in the birth date of two years, together with his implications of a later school leaving age and a longer time in apprenticeship do not stand up to inspection.

Around 1832, Barker had observed a Bramah hydraulic press in operation, and noted the mechanical leverage that this produced. Joseph Bramah (1748-1814) applied the principle of Pascal's law, the practical interpretation of which is that a small force on a small area creates a proportionally large force on a larger area, so in1795 he patented his hydraulic press. It must have been an easy step for Barker to relate what he saw here to the traditional way of raising wind by hand for organs, where the bellows reservoir supports a heavy top loading of metal weights. He made experiments with pneumatic cylinders (which failed), and then small bellows-type air motors.[344] In 1833, William Hill had just completed the organ of York Minster, and its heavy action was already well known. Towards the end of that year, Barker was confident enough in his development-work to write to Dr Matthew Camidge, organist of York Minster, introducing his concept of a pneumatic relay using the wind from the organ reservoir.[345] Camidge was much interested, but cited financial difficulties. Similar action difficulties were also apparent on Hill's 1834 organ for Birmingham Town Hall, encouraging Barker to offer his pneumatic assistance device to the builder in 1834 or 1835. Nothing is

344. Because hydraulic fluid (water, and oil) is to all intents and purposes incompressible, the power is transmitted instantaneously. Air is highly compressible so the power transfer is never instantaneous.

345. Bryceson, Henry, 'Description of the electric Organ', *J. Soc. Arts* 840 (London: 25 December 1868), p. 82. Also Hopkins and Rimbault

known of Hill's reaction, and it was not until 1849 that the Birmingham organ had the benefit of pneumatic assistance.

In 1837, Barker, probably aware already of Cavaillé-Coll's commission to build a very large organ for the Royal Church of St-Denis in Paris (1833), contacted the French builder about his device. For once, he had a positive reply, for Cavaillé-Coll, no doubt already fearful of the potential action difficulties he was about to face, invited Barker to Paris for discussions.

It was probably some time in 1838 or early 1839 that Barker moved to France, for we know that he became an employee of Cavaillé-Coll in May 1839, and that he was granted a *Brevet d'Invention* in the same year. A diagram of his pneumatic lever, taken from the specification, shews the lever upside down compared with the orientation of pneumatic levers presented in the standard textbooks, *vide* Figure 85. Can we assume that Cavaillé-Coll's action geometry for the St-Denis organ dictated the arrangement shewn in the *memoire descriptif*, or did Barker set out to mislead his competition, or was there a draughting or printing error?

In December 1839, Cavaillé-Coll submitted a revised proposal to the Minister of Public Works, which contained, amongst other items, the introduction of the patented Barker lever. The organ finally came into use for services in October 1840, seven years after the order was placed.

Barker left Cavaillé-Coll in January 1841, but in April of that year he negotiated a licence agreement with the organ-builder, which provided a royalty of 2,000 FF for each occasion on which the *Machine Barker* was used. The relationship between the two organ-builders seems to have been unsatisfactory for Barker, as he signed an agreement with the organ-builder Daublaine-Callinet on 9 June 1841 to become its technical director (*contre-maître*). Evidently he took up the position in early 1842, when he immediately negotiated a licence agreement for the use of his pneumatic lever that would earn him a royalty fee of 500 FF for the use of his pneumatic lever that would earn him a royalty of 500 FF for each instrument.

Note the difference in orientation of the lever as shown in *Nouveau manuel complet l'organiste*

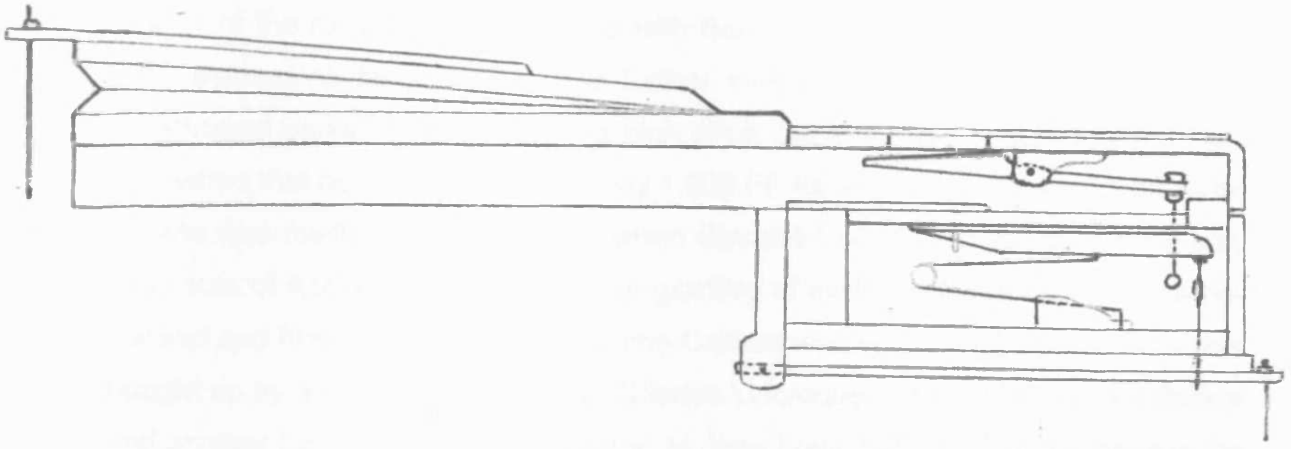

lever as presented in *Nouveau manuel complet l'organiste*, (Paris: 1905), plate 25

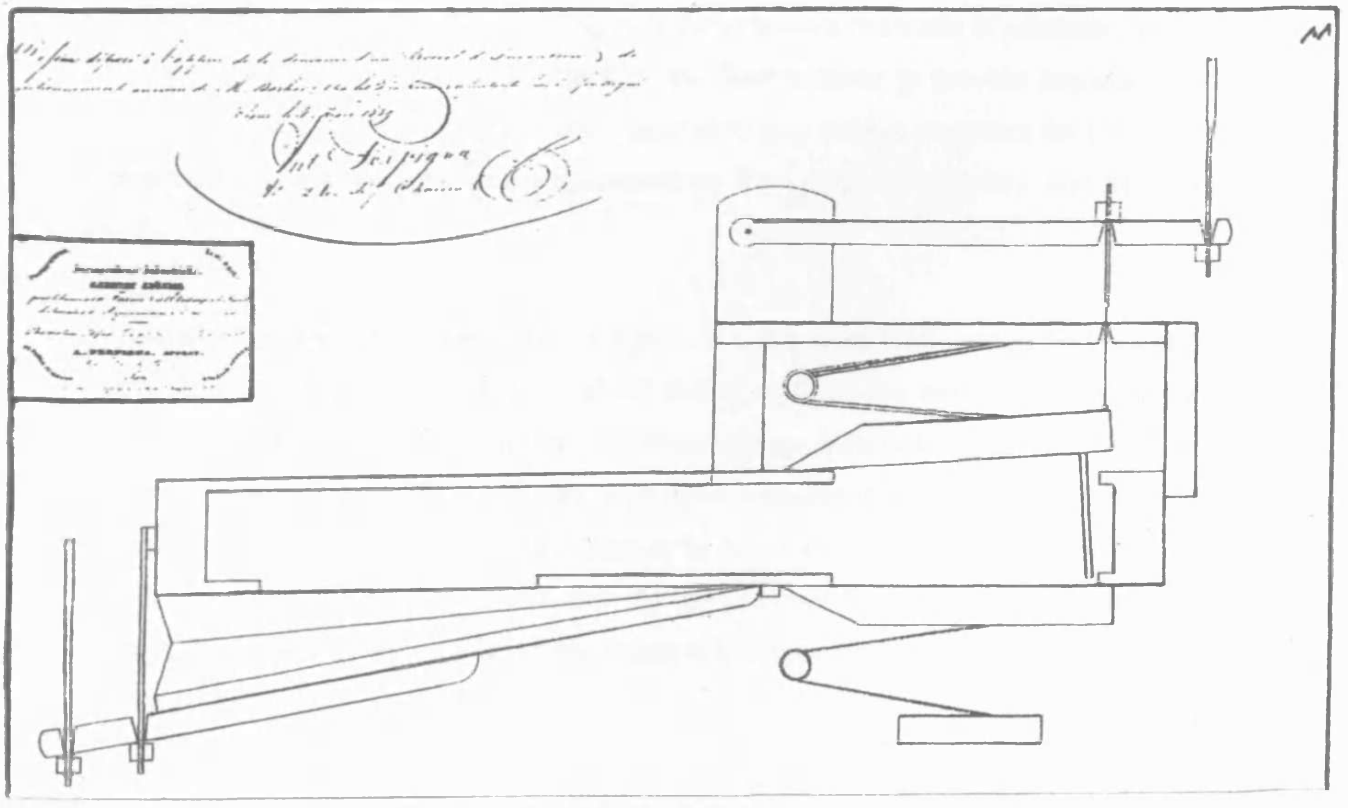

Figure 85 A drawing of the original Barker lever
(source: an enhanced copy from Patent No. 9811 AD 1839)

Cavaillé-Coll soon became aware that Daublaine-Callinet was paying only a quarter of the royalty he had agreed with Barker, so he wrote a letter on 28 July 1842 expressing his concern. He further indicated that he would never again recommend Barker's lever at such a high price, but in a more conciliatory manner, suggested that he was prepared to pay 1,000 FF for any rebuilding contracts. The dispute was finally resolved in1845 when Cavaillé-Coll agreed to pay a once-only lump sum of 4,500 FF to Barker for the granting of exclusive licences to Daublaine-Callinet and himself. By then, Daublaine-Callinet was in financial trouble, so it was bought up by a venture capitalist, M Charles Ducroquet. The latter retained Barker and another Daublaine-Callinet director, M Jean Louis Félix Danjou, to manage the business.

In 1851, Ducroquet built a prize-winning instrument to be shewn at the Great Exhibition in London. Although having only two *claviers manuels et pédalier*, and 20 stops, it included a full deployment of the Barker lever to provide assistance to the *Grand orgue*, plus the unison off, super and sub octave couplers for the *Récit*. It is said that Henry Willis was impressed by the range of couplers and the light touch.

By the time of the 1855 Exposition in Paris, M Ducroquet was unwell and about to retire. The firm had already built a show instrument for the event, so Barker was allowed to exhibit the organ under his own name. Although there were only 20 speaking stops, it had three claviers and an independent pedal division, while the use of the pneumatic lever enabled Barker to place the powerful reed stops of the *grand orgue* within the *recit éxpressif*. At the close of the Exposition, Barker was awarded a first class medal, and later made a Chevalier of the Legion of Honour by the Emperor, Napoleon III.

Shortly afterwards, the Ducroquet firm, still with two hundred workers, was acquired by the Belgian organ–builder, Merklin, who had factories in Brussels. Barker stayed with the new owner until 1858, when he left, entering into a partnership during 1860 with Charles Verschneider, previously in the employ of Barker at Daublaine-Callinet.

The foreman of the new business was Barker's foreman at Ducroquet, Paul Ferat. From 1861 to 1869, Barker was engaged with Albert Peschard in the development of the electric action organ, and the construction of the electric organs for the Collegiate Church in Salon, St- Augustin in Paris, and St-Pierre de Montrouge. The bombardment of Paris in 1870 at the start of the Franco-Prussian war resulted in the destruction of his workshop, whereupon he departed for Dublin.

Fortune again smiled upon Barker when he was awarded the contract for a new organ at the Roman Catholic Cathedral in Marlborough Street, Dublin. Without friends to advise him, he ran into technical difficulties. But help was at hand in the person of Hilborne Roosevelt, the American organ–builder who was then travelling through Europe and who was prevailed upon to spend time *incognito* with Barker. In the event however, the instrument was not a success. In 1876, the musical public raised an annuity for Barker, but he nevertheless ended his life in poverty and obscurity at Maidstone, Kent on 26 November 1879.

Patents

Brevet d'Invention (fifteen years) No. 9811, 20 June 1839
Pneumatic lever

Brevet d'Invention (fifteen years) No. 13996, 29 June 1855
Improved pneumatic lever

Brevet d'Invention (fifteen years) No. 56019, 24 October 1862
Electro-pneumatic action

British patent (fourteen years) No. 232, 22 January 1868
Electro-pneumatic action

Awards

First Class Medal Paris Exposition, 1855

Chevalier of the Legion of Honour, 1855

Marriages and Children

First marriage[346] in Bath, Somerset 21 October 1841

Emma, birth date unknown, d. 31 May 1866

Children

Charles, b. 11 January 1843 d. 1843

Charles, II b. 1845 d. 1846

Marie Emma Victorine, b. 1848 d. 1854

Second marriage [347]1870

To the daughter of M. Ougly, Barker's foreman in Paris.

Hinton suggested that Barker became a naturalised Frenchman. My enquiry to the *Ministère des affaires sociale, du travail et de la solidarité* in 2003 elicited a negative response (letter from the ministry in Paris to me, dated 19 September 2003).

---

346. French Ministry of Culture web site www.culture/cavaille-coll/en/bas_barker.htm

347. Hinton,J. W., *Story of the electric Organ* (London: Simkin, Marshall, Hamilton, Kent & co., Ltd., 1909), p. 43

3. Froment, Paul Alexandre Gustave

Gustave Froment was born in Paris in 1815, where he lived for most of his life. He died in 1865 at the early age of 50 years.[348] He was a son of a long standing family of watchmakers and 'mécaniciens' from Reims, and, as a boy of 14 years, exhibited his inheritance of the family skills by constructing a device to count the number of steps he took each day. Froment was educated at l'École Sainte-Barbe, and later at the Lycée Louis le Grand. In 1833, at the age of 18 years, Froment conceived the design of an electric motor, later presenting it to M. Liouville on his admittance to l'École polytechnique in that same year. He left the college in 1835, and appears to have spent some time working for an engineering company in Manchester,[349] before returning to Paris in 1838 to join an instrument-maker by the name of Gambey. Shortly afterwards, he started his own *atelier* for the manufacture of scientific apparatus. Around 1840, he took on one Demoulin as a partner, the firm ultimately becoming one of the leading makers of precision instruments of the nineteenth century.

In 1843, the firm constructed the first dial telegraph receiver designed by Breguet[350] for the French railways. Amongst other successful collaborations with scientists was that with Jean Bertrand-Léon Foucault (1819-1868) on his classic pendulum experiment for the measurement of the rotation of the earth, and demonstrated in the Pantheon, Paris, during 1851. Perhaps, though, the most important experimental equipment made by Froment for Foucault was the rotating mirror assembly for the measurement of the speed of light.[351] Froment devised an air driven turbine to rotate a small mirror at exactly 400 revolutions per second; the air supply to the turbine was provided by no less than Aristide Cavaillé-Coll (who had already seen Froment's electrically operated clavier with its octave or so of bells). The distinguished organ-builder's son, Cécile, writing about his father's

---

348. Grimal, P., *Dictionnaire de Biographies* (Paris: P.U.F., 1958), pp. 567-568
349. www.bibliotheque.polytechnique.fr/patrimione/collectionhomme/BioFroment.html
350. Carre, Latrice, *Télégraphes: innovations techniques et société au 19e siècle* CM3. CAR pp. 7-8
351. www.bibliotheque.polytechnique.fr/patrimione/collectionhomme/BioFroment.html

relationship with Foucault and Froment,[352] records the following words by Professor Gariel:

> Ce miroir, en verre argenté, qui a 0.014m de diamètre, est monté directement sur l'axe d'une petite turbine à air, d'un système connu, admirablement construite par M. Froment. L'air est fourni par une soufflerie à haute pression de M. Cavaillé-Coll qui s'est acquis une juste renommée dans la fabrication des grandes orgues.
>
> [The silvered glass mirror has a diameter of 1.4 mm and is mounted directly on the axis of a tiny air-driven turbine, of an established system, and is admirably constructed by M. Froment. The air is provided by a high pressure bellows provided by M. Cavaillé-Coll, who has a good reputation as an organ-builder].

We must also note his instrument for dividing the millimetre into 1,000 equal parts [the micrometer or 'micron'], which could only be observed under the microscope. Between 1844 and his death, Froment was one of the leading engineers to construct electric motors using electromagnets. Probably the first industrial use for his motor was the powering of precision instruments. His progress toward the wider industrial use of electric motors was limited by the high cost of electricity from batteries.

In 1851, Froment patented his *'télégraph à cadran alphabétique'*.[353] The transmitter was operated by two claviers, each providing 14 keys for the alphabet, numerals and punctuation marks, *vide* Figure86. The keys closed the electrical circuits that directly activated electromagnets controlling the position of the pointers on the dial faces. Perhaps it was this that provided a stimulus for the development of electric action for organs.

After Froment's death in 1865, the firm was taken over by Dumoulin. [354]

---

352. Provost, Pierre, *L'Oeuvre de Gustave Froment,* http://.we152.lerelaisinternet.com/AMSLLG/1_oevre_de-froment
353. Froment, P. A. G., *Brevet d'Invention* No.6948,13 February 1851
354. *Froment (1815-1869) Mecanicien, père des appareilles à clavier*, Catalogue de l'exposition <T comme Télégraphe>, Musée d'Histoire des PTT d'Alsace, à Riquewihr, 27 March to 11 November 1982, CM3.1-TCO

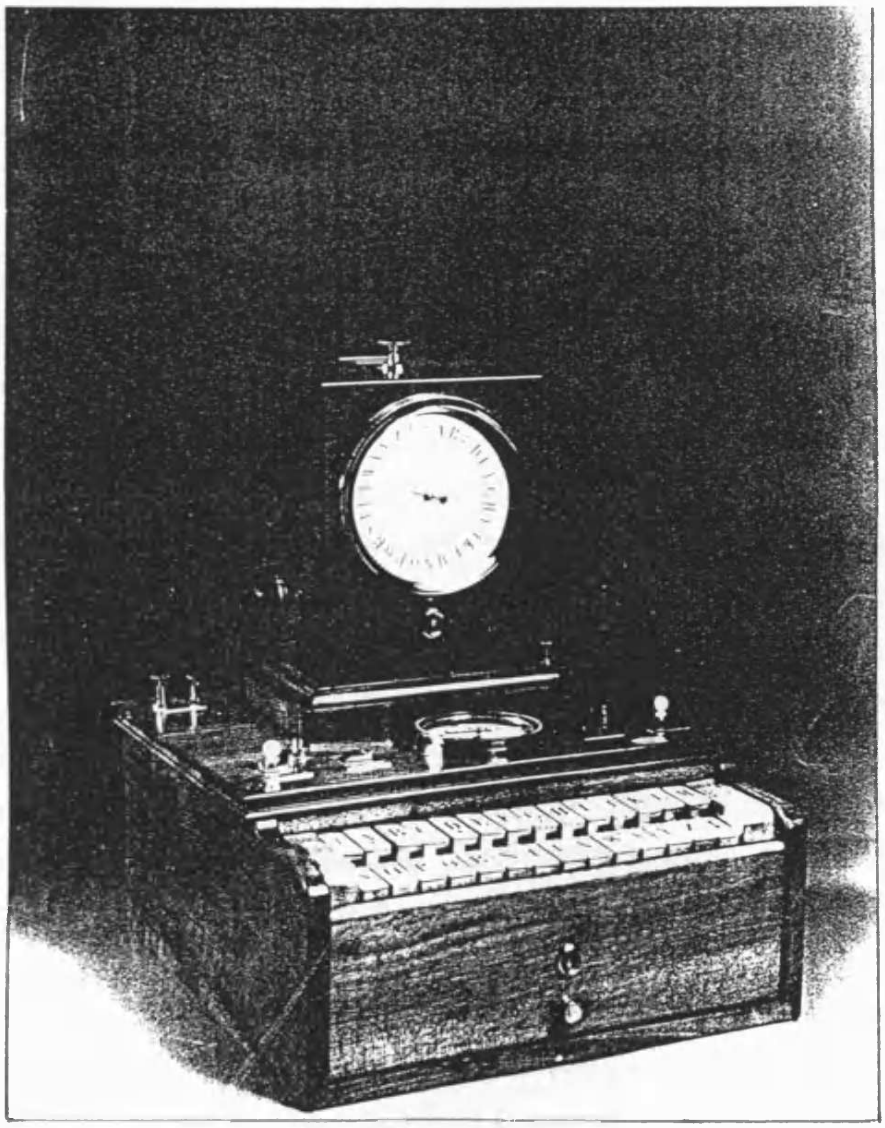

Figure 86 *Télégraphe à cadran alphabétique (appareils à clavier). Système Froment*
(source: *Musée des arts et métiers*, Paris, Inv.:11700-0001-)

3. Gauntlett, Henry John

Henry John Gauntlett was born on 9 July 1805 at Wellington in Shropshire and died on 21 February 1876 in Kensington, London. His father, the Rev. Henry Gauntlett was a curate at Wellington until 1815, when he became vicar to Olney in Buckinghamshire. Shortly afterwards, when the young Gauntlett was only ten years old, his father appointed him organist, a position he held for ten years. he was at first educated with the intention that he took orders. He moved to London in 1826 and was articled to a solicitor, duly qualifying in 1834, thereafter practising law with his brother. In 1827, he became organist at St. Olave, Southwark, remaining at that post until 1847. At some time in the early thirties, he took lessons from Samuel Wesley.

Gauntlett became editor of *Musical World* in 1837, but did not occupy the position for long. In 1843 he was awarded a Lambeth Mus.D., whereupon he gave up his legal career and devoted his energy to musical journalism, composition and organ playing.[355] Mendelssohn chose Gauntlett to play the organ part in the 26 August 1846 production of Elijah at Birmingham. Unfortunately, the part had been lost, so Gauntlett devised one from the orchestral score; this to the composer's entire satisfaction. After resigning the position at St Olave, he became successively organist at several London Churches. His last appointment was that of organist of St Bartholomew, Smithfield in 1872, a position he held until his death.

An acknowledged authority on organ design, Gauntlett was responsible, along with William Hill the London organ-builder, for some important developments in the late 1830s and 1840s: the introduction of the German C-compass for the manual claviers, the full diapason chorus (the rebuilt St Olave, Southwark instrument by H. C. Lincoln of 1842 even had a 32ft Untersatz on the Great clavier), and the independent pedal clavier of two octaves or more. The first instrument that Gauntlett and Hill transformed against much opposition, and just in time for Mendelssohn to play the instrument during his visit to London

---

355. Gauntlett was awarded the doctorate on 21 January 1843 for 'proficiency in music'. Lambeth Palace Library FI/CC191/2, muniment book and FII/184/26a.

in the autumn of 1837, was that of Christ Church, Newgate Street (City of London). An account of Mendelssohn's playing on that occasion was published in *Musical World*.[356] Gauntlett's confidence in aggressively promoting these design principles to all those willing to hear him was based on real experience: first, his own attempts in 1827 to play J. S. Bach on the inadequate instruments of that time; secondly, Mendelssohn's first visit to London in 1829, when Gauntlett had the revelation of hearing Bach played for the first time by a master fully acquainted with the organ works; and lastly, his tours of Europe in 1836 or thereabouts, and again in 1842, when he visited and heard the magnificent organs of France, Germany and Holland. All this was just what was needed for Gauntlett to campaign vigorously for organ reform at home. Not content with these revolutionary ideas, Gauntlett enhanced the expressive power of the organ by the addition of string stops, novel flutes and reeds; and he was also the first patentee (1852) of the electric organ in the world, *vide* Section 3.3.1.

Gauntlett was also a composer of hundreds of hymn tunes and chants. *Hymns Ancient & Modern*[357] includes 22 tunes, of which Irby ('Once in Royal David's City') is probably the most popular. Only J. B. Dykes with 60 tunes, and W. H. Monk with 57, surpassed Gauntlett's contribution to *A & M*.

This biography is based mainly on material from:

Dictionary of National Biography (Oxford: OUP, 1917) pp. 953-955

Bicknell, Stephen, *The History of the English Organ* (Cambridge: CUP, 1990), pp.185-195

New Grove, (London: Macmillan, 2000) pp. 578-9

356. Gauntlett, J.H., *Musical World* (15 September 1837), p.14, but Thistlethwaite, *The Making of the Victorian Organ*, and Plumley, *The Organs of the City of London* both give the date of the Hill organ as 1838.

357. *Hymns Ancient and Modern* (London: 1/1861)

4. Weigle, Carl Gottlob

Carl Gottlob Weigle was born in Ludwigsburg on 19 November 1810, and died on 16 November 1882 in Stuttgart. Fischer gives his second Christian name as 'Gottlob', but Audsley and others record 'Gottlieb'. Audsley rather spoils his reputation for veracity by attributing an 1891 US patent for a membrane wind chest to C. G. Weigle who died, as we have seen in 1882, rather than to his son Wilhem Theodor Freidrich (1850-1906). After leaving school in 1826, he was apprenticed to the important organ-builder Eberhard Friedrich Walcker, ultimately becoming Walcker's leading assistant. In 1845, Weigle left Walcker to set up his own business in Stuttgart, after gaining some experience with the Kegellade or cone wind chest.

Weigle further developed the cone system and applied it to organs in several Protestant Churches in the Württemburg area. From 1851, he began the exporting of his instruments to foreign markets, and In 1870 built the second direct electrical action organ in Europe, with a further instrument for the world exhibition in Vienna during 1873, *vide* Section 3.2. Organs built by C. G. Weigle during the 1850s include:

1849	Freudenstadt	II/20
1849	Stuttgart, Synagogue	II/20
1850	Echterdingen, Protestant Church	II/26
1850	Wiesensteig, Cathedral Church	II/22
1851	Comburg, Abbey Church	II/20
1853	Waldsee, Cathedral Church	II/22
1854	Saulgau, Cathedral Churc	II/27
1856	Gensbach, Protestant Church	II/23
1858	Ulm, Trinity Church	II/24

By the end of the eighties, the firm had built around 100 organs in the Stuttgart area and a further nine instruments for other countries, at which time the son W. T. Friedrich Weigle took over the business. The firm remained an active player until the mid seventies

---

The above material is summarised from: Fischer, Hermann, *Biographisch-Bibliographisches Kirchenlexikon* Vol. XIII, Cols. 604-605 (Nordhausen: Traugott Bautz, 1998)

APPENDIX II

DEVELOPMENT OF BATTERY TECHNOLOGY

Volta's primitive cell provided power for only a few hours before the cloth or paper spacers dried out and it became necessary to re-hydrate the material. Even so, the pile was only effective for a couple of days before it needed to be taken apart and cleaned. Only a year after Volta's communication to the Royal Society, William Cruickshanks[358] had devised a trough battery in which 60 pairs of silver and zinc plates were cemented into a long wooden box leaving a small cell (compartment) between each pair. The cells were 'charged' with a dilute solution of ammonium chloride. Such batteries might last several weeks, but the power output declined during this period. There were two notable disadvantages: firstly, metallic impurities in the zinc set up local electrolytic cells that dissolved the zinc plates, forming corrosion products that affected the performance of the battery. Secondly, hydrogen bubbles are liberated when a current is drawn. The hydrogen blankets the copper (or silver) plates, effectively reducing the area available for the operation of the battery. The hydrogen blanket also acts as a gaseous electrode in its own right, acting with the opposite potential to that of the metallic electrode; an effect now known as 'polarisation'. Both these phenomena had a bad effect on the performance of the battery; the first whether the battery was in use or not, and the second when a current was drawn. C. H. Wilkinson minimised these problems by devising a lift system to remove all the electrodes from the battery whenever it was not in use. It was known as the 'plunge' battery.[359]

---

358. Cruickshanks, William, 'Additional remarks on Galvanic Electricity', *Journal of Natural Philosophy, Chemistry, and the Arts* 4 (1801), pp. 254-64

359. Wilkinson, C. H., 'On the means of Simplifying and Improving the Galvanic Apparatus', *ibid*, 8 (1804), pp. 1-5

An example of a trough battery is shewn in Figure 87. Sometimes, sand moistened with the electrolyte was placed in the compartments to prevent sloshing during movement of the battery. Such batteries were built to a large size for experimental purposes. The Royal Institution's 'Great Battery' of 1810[360] was made up of 200 plunge batteries, each of 10 pairs of electrodes 100mm square, contained within a ceramic trough, *vide* Figure 88.

Experiments by J. G. Children[361] confirmed earlier qualitative experience noted by Humphrey Davy that the 'intensity of the electrical force' (which later became known as the 'voltage'), was proportional to the number of pairs connected in series, and that the quantity of electricity (the amperage) was proportional to the surface area of pairs, and/or the number of batteries connected in parallel. It must be remembered though that voltmeters and amperemeters were not invented until the 1870s, and that the estimation of intensity and quantity had to be based on such qualitative parameters as the sparking propensity of the battery and the heating effect when it was short-circuited. Braver experimentalists used the tip of the tongue!

It was not until 1826 that a technique for dealing with the impurities in the commercial zinc used for the sacrificial electrode was discussed.[362] Pure zinc made by distillation was far too expensive, but the simple application of mercury to zinc, a process known as amalgamation, was effective in neutralising local voltaic action resulting from the impurities. K. T. Kemp and William Sturgeon were the first to regularly use amalgamation for their experiments.[363]

---

360. Davy, Humphrey, 'On Some New Electrochemical Researches, on Various Objects, Particularly the metallic Bodies, from the Alkalies and Earths, and on Some Combinations of Hydrogene', *Phil. Trans* 100 (1810), pp. 16-74

361. Children, John G., 'An account of Some Experiments, Performed with a View to Ascertain the Most Advantageous Method of Constructing a Voltaic Apparatus, for the Purpose of Chemical Research', *Phil. Trans.* 99 (1809), pp. 32-38

362. King, W. James, 'The Development of Electrical technology in the 19th Century: 1', *Contributions from the Museum of History and Technology, Bulletin 228, Smithsonian Institute*, p. 24130.

363. *Ibid*, p. 241

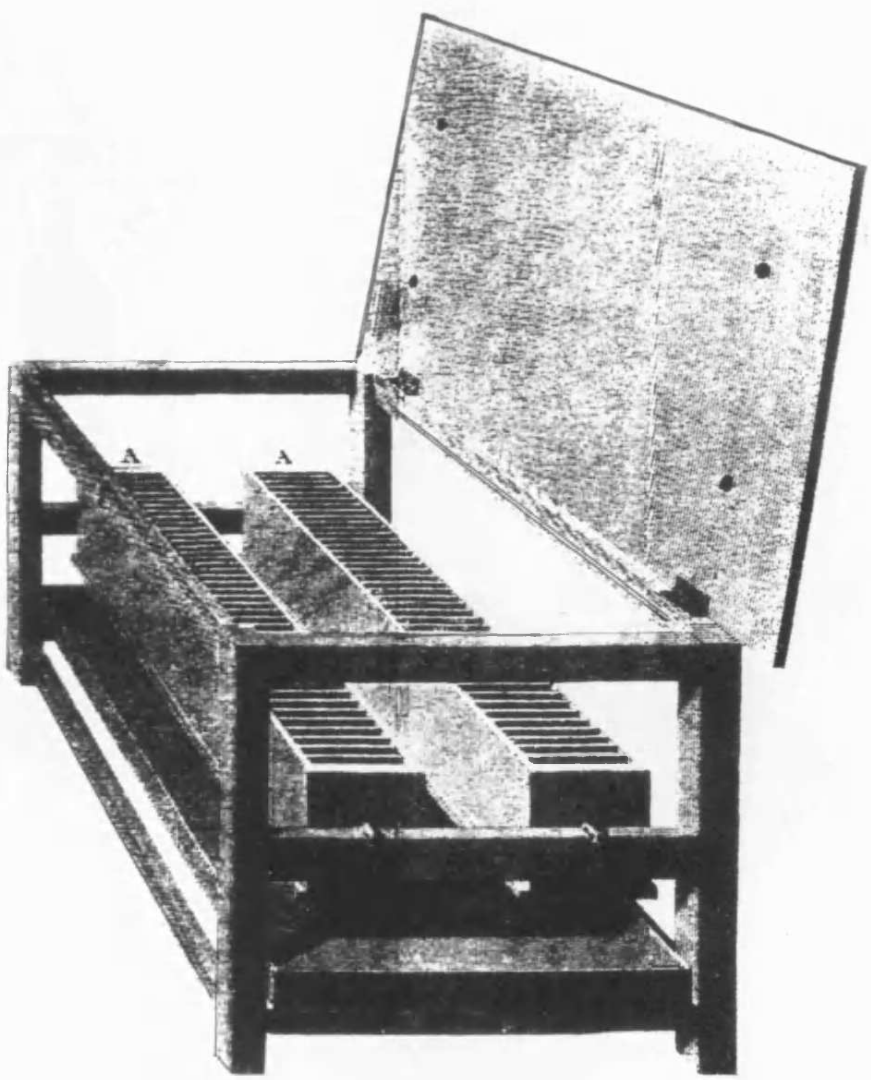

Figure 87 Pepys' trough battery of 1803
(source: king, James, W., *Development of Electrical Technology in the Nineteenth Century*, Contributions from the Museum of History and Technology, Bulletin 228, Smithsonian Institute, p. 23)

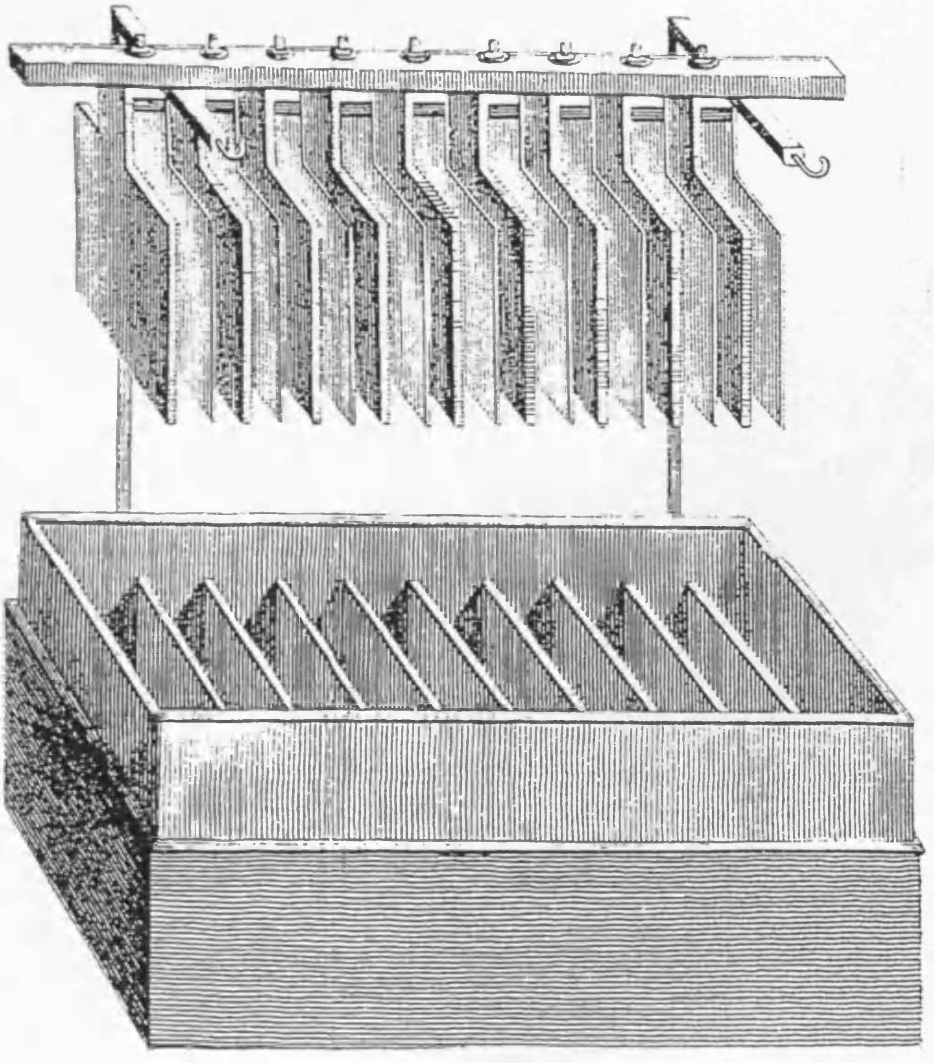

Figure 88 One of 200 plunge batteries of the Royal Institution's 'Great Battery'
(source: King, *Development*, p. 240)

Resolution of the other challenge, polarisation, had to await the elapse of a further decade. The first practical attempt to combat hydrogen evolution at the sacrificial electrode was made in 1836 by John Frederic Daniell (1790-1845), professor of chemistry at King's College, London, with his non-polarisable 'constant' cell.[364] Daniell placed an amalgamated zinc electrode in a dilute sulphuric acid solution that he separated from a copper electrode immersed in copper sulphate solution by a permeable ox gullet. By 1839, the gullet had been replaced by a more reliable unglazed porous pot, *vide* Figure 89. The Daniell dual electrolyte cell liberated copper rather than hydrogen at the copper electrode, so polarisation did not take place. The practical advantage was a constant intensity of electricity to which a value of 1 was given, and which later became established as 1 volt. It was the Daniell battery that was initially used to provide a reliable source of power for the operation of the first commercial electromagnetic telegraph systems in the UK and the US, as it was well able to provide the low current needed to activate the needle receivers. As other commercial uses for battery power were developed, for example lighting, it was found that the battery's high internal resistance and consequent low current output were a significant disadvantage that provided the spur to a flood of new cell designs. As early as 1839, William Robert Grove (1811-1896), a barrister and later professor of physics at the London Institution devised a variation of the Daniell cell in which he replaced the copper sulphate electrolyte and the copper electrode by a strong nitric acid electrolyte and a platinum electrode,[365] *vide* Figure 90. This was a much more expensive battery, but it had an emf of 1.9 V, almost twice that of the Daniell cell, and its low internal resistance allowed an output of up to 10 A.

---

364. Daniell, J. Frederic, 'On Voltaic combinations', *Philosophical Transactions* vol.126 (1836), pp.107-124

365. Grove, W. R., 'On a New voltaic Combination', *Philosophical Magazine* vol.13 (1838), pp. 430-31

C Strip of copper immersed in a porous porcelain jar

Z A thin hollow cylinder of zinc

The outer glass jar contains dilute sulphuric acid

The inner jar contains a saturated solution of copper sulphate

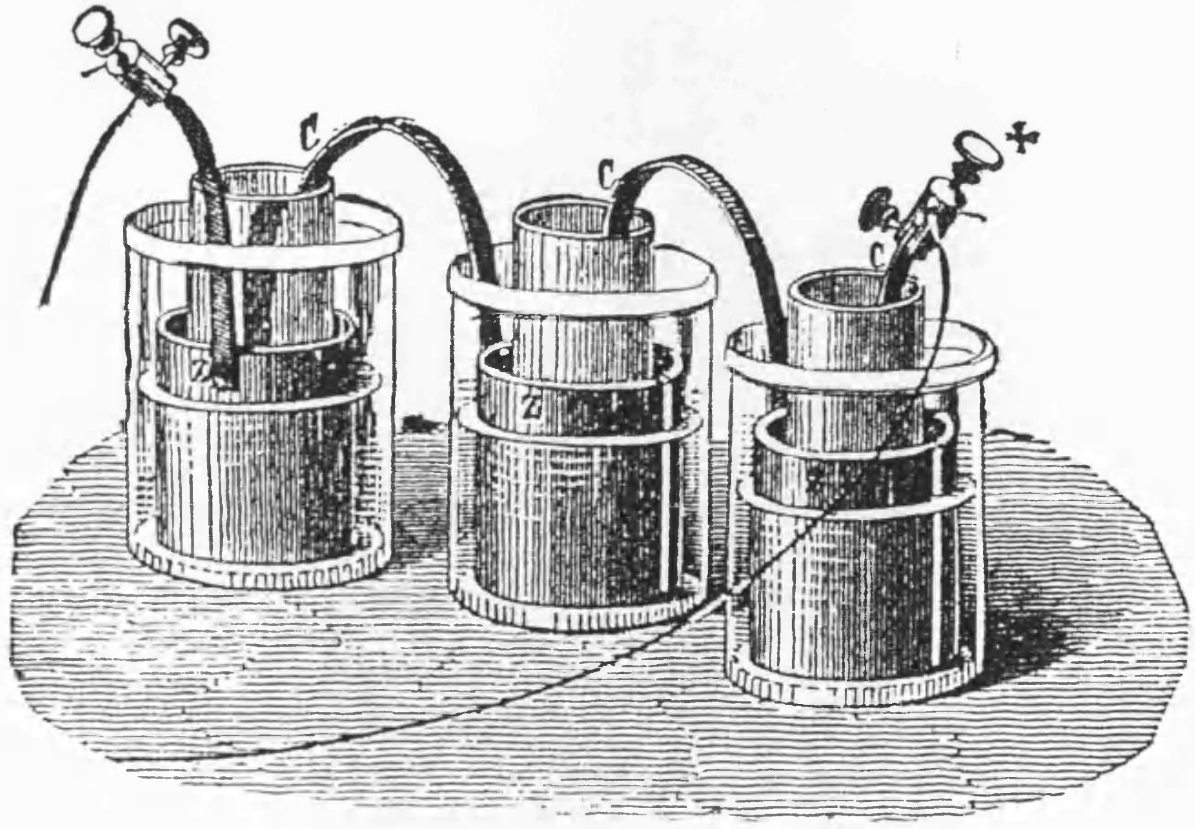

Figure 89 Daniell's constant battery of 1836, an example with three cells in series
(source: Niaudet, Alfred, Elementary Treatise on Electric Batteries (New York: 1886), p. 86

A Rectangular amalgamated zinc sheet bent into a long sided 'U'

B Outer jar filled with dilute sulphuric acid

C Inner rectangular porous pot containing nitric acid

D bar carrying a rectangular platinum electrode – the cell's positive pole

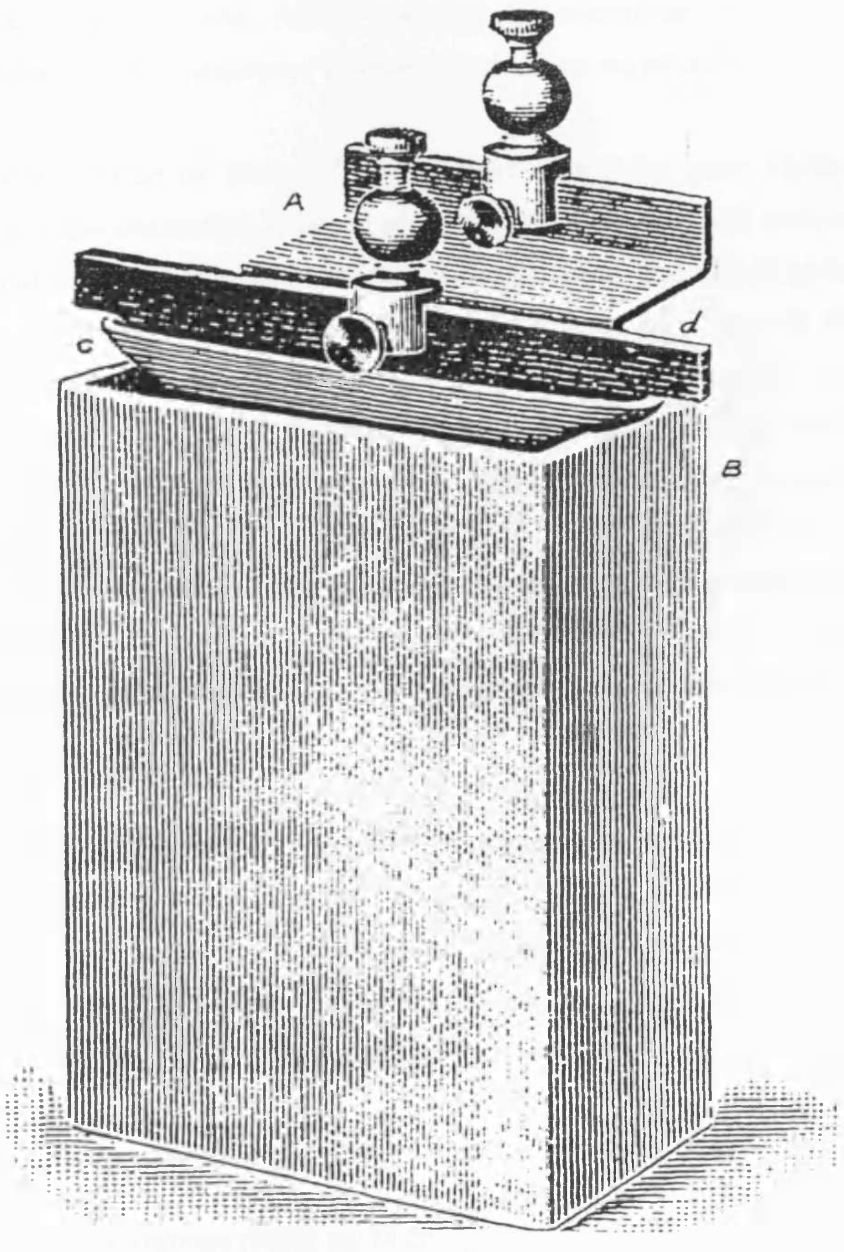

Figure 90 The Grove twin fluid cell
(source: Marshall, Percival, Electric Batteries (London:1899), p. 29

Apart from its cost, another disadvantage was the evolution of toxic nitrogen oxide gases during operation. Robert Wilhem Bunsen (1811-1899) reduced the cost of the Grove cell by using a carbon electrode instead of platinum,[366] and overcoming the higher resistance of the electrode by replacing the strong nitric acid with the fuming grade, *vide* Figure 91. In practice, the emf was slightly less, but the current output was again almost doubled. Despite the fuming, the Grove and Bunsen cells were widely used. Again, however, the electrodes had to be withdrawn from the electrolytes whenever the cells were taken out of operation.

Another development initiated by Bunsen[367] and others during the early 1840s, was a return to the single electrolyte concept of Volta, but using zinc and carbon electrodes in a potassium dichromate-sulphuric acid electrolyte that significantly reduced polarisation, *vide* Figure 92. Optionally, the electrolyte was made-up by dissolving chromic acid salt in water without the addition of sulphuric acid. As with the other designs, the sacrificial zinc electrodes must be kept well amalgamated. The bichromate cell as it was known had an emf of approximately 2 V and was capable of giving a strong current for a short time. The cell output could be recovered by removing the carbon electrode and allowing the hydrogen gas that had collected on the carbon to be set free. This single electrolyte cell did not use a porous pot and was therefore significantly cheaper. It was widely used in the 1860s.

In 1859, Johannes Heinrich Meidinger (1831-1905) innovated a Daniell type cell, but replaced the porous pot separating the two electrolytes by a system which used gravity to retard the interdiffusion of the fluids[368]. During the next 20 years it was very popular in Germany - but nowhere else - in spite of its low emf and high resistivity. Perhaps though, the most important primary cell technology that has

---

366. Bunsen, Robert, 'Ueber die Anwendung der Kohle zur Volta'schen Batterie', *Annalen der Physik,* vol. 54 (1841), pp. 417-420

367. Marshall, Percival. *Electric Batteries* (1899), pp. 14-22

368. Niaudet, Alfred, *Elementary Treatise on Electric Batteries* (1886), pp.124-128

C Carbon electrode

Z Zinc electrode, approx 4 mm in thickness. The zinc needs to be thoroughly amalgamated to prevent its degradation when not in use.

The outer jar is glazed earthenware (less fragile than glass). It contains dilute sulphuric acid. The porous pot, with its carbon electrode, contains strong nitric acid, or sometimes chromic acid.

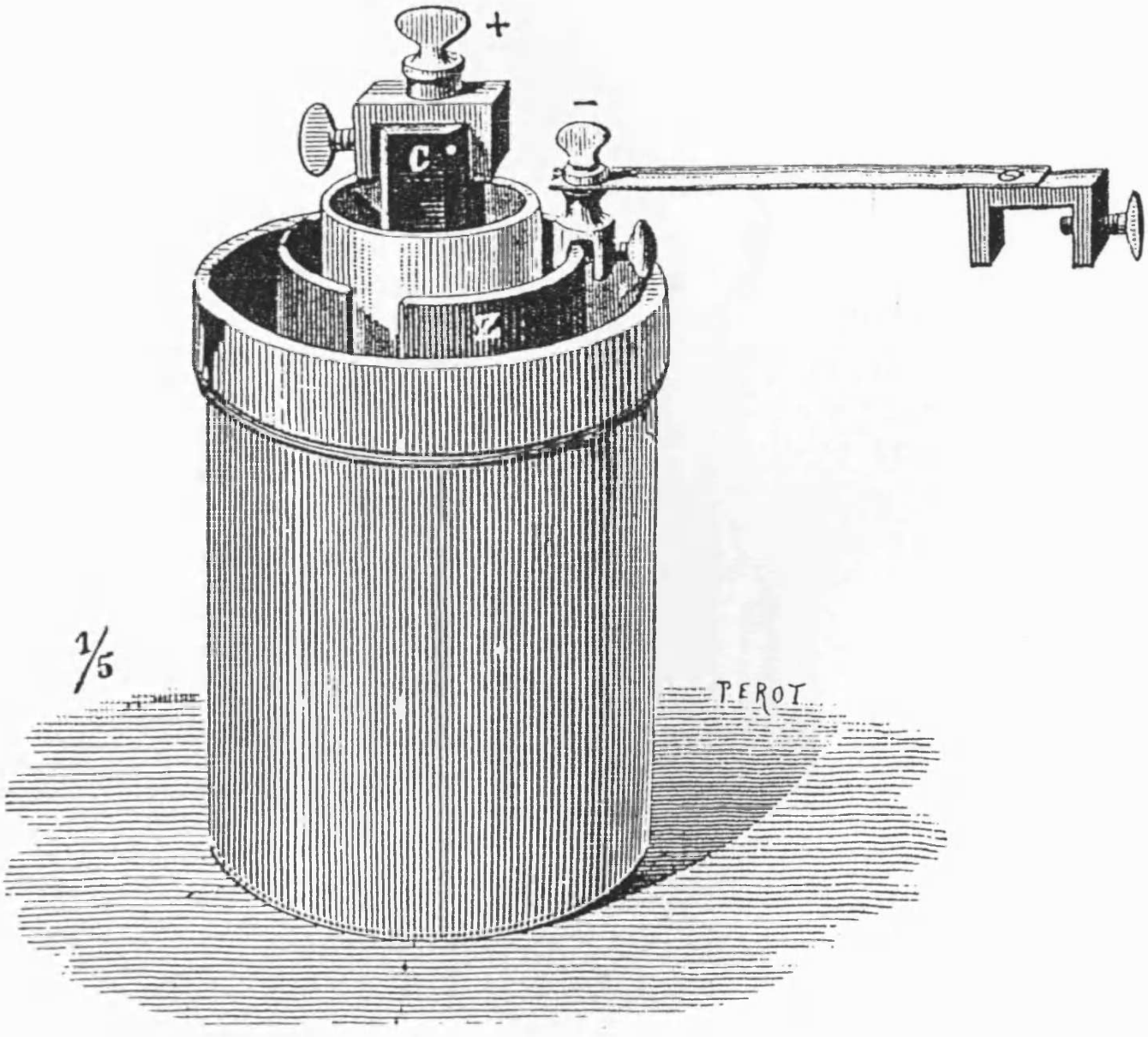

Figure 91 Bunsen's chromic/nitric acid cell (French pattern)
(source: Niaudet, Alfred, *Elementary Treatise on Electric Batteries* (New York: 1886), p. 159

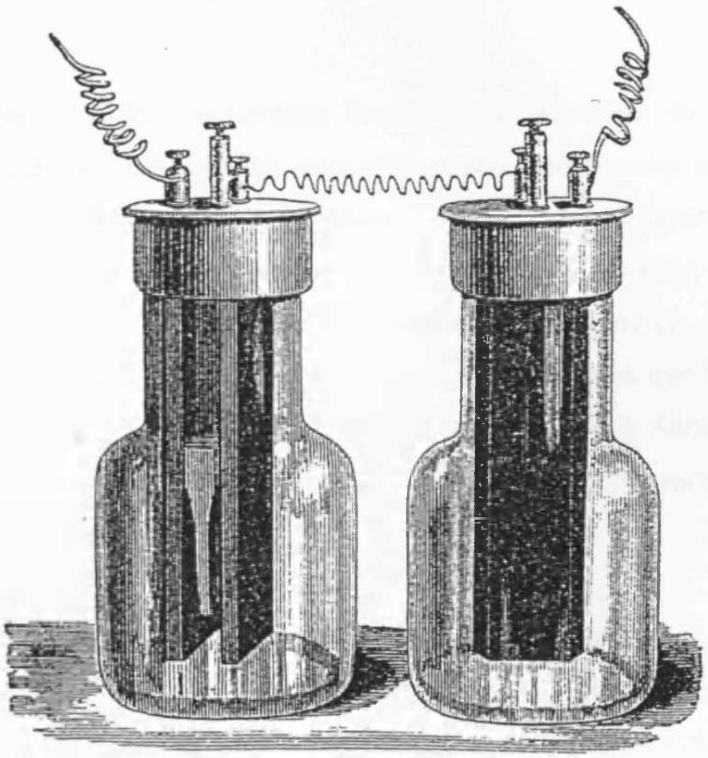

Figure 92 Two single fluid bichromate cells in series
(source: Urquhart, John W., *Electric Light* (London: 1880), p.18)

stood the test of time is that invented by Georges Leclanché (1839-1882). After an education in Britain, Leclanché completed his technical training in Paris during 1860, and in 1866 patented a new primary cell.[369] A carbon electrode was inserted into a paste of manganese dioxide and carbon powder. The zinc electrode was located in a solution of ammonium chloride separated from the manganese dioxide paste by a porous pot, *vide* Figure 93. In 1887, Gassner[370] changed the ammonium chloride solution to a paste of zinc chloride, zinc oxide and plaster filler. Thus was born the traditional *Ever Ready* dry cell that continues to this day in widespread use as a power supply for a broad range of applications.

During the early 1880s, scientists turned their attention to overcoming the hazards caused by working with corrosive, toxic and fuming acids through the use of alkaline electrolytes. In France, Lalande and Chaperon[371] invented a single fluid cell with the traditional copper and zinc electrodes, copper oxide as the depolariser, and a concentrated potassium hydroxide solution for the electrolyte, *vide* Figure 94. The strong caustic potash was itself highly corrosive to skin, but at least it did not fume or attack iron and steel. Although its emf was only 0.9 V, its low internal resistance ensured a high current. T. A. Edison designed a similar battery in 1889.

In all the cells discussed so far, zinc metal is used for the negative electrode and copper or an inert material (platinum or carbon), for the positive electrode. Although Volta thought that he had invented a source of everlasting electricity, the reality quickly became apparent that the zinc dissolved whenever a current was drawn. Following Faraday's work on electrochemistry, we know that 1.22 grams of zinc will dissolve in providing a current of 1 A for 1 hour (known as 1 Ampere hour). The early workers talked about zinc being 'burned' and that the running of an arc light for 2 hours (say) 'burned' 25 grams of zinc.

---

369. Leclanché, Georges L., US Patent No. 55,441, 5 June 1866

370. King, James W., 'The Development of Electrical technology', p. 246

371. *Ibid*, p. 246

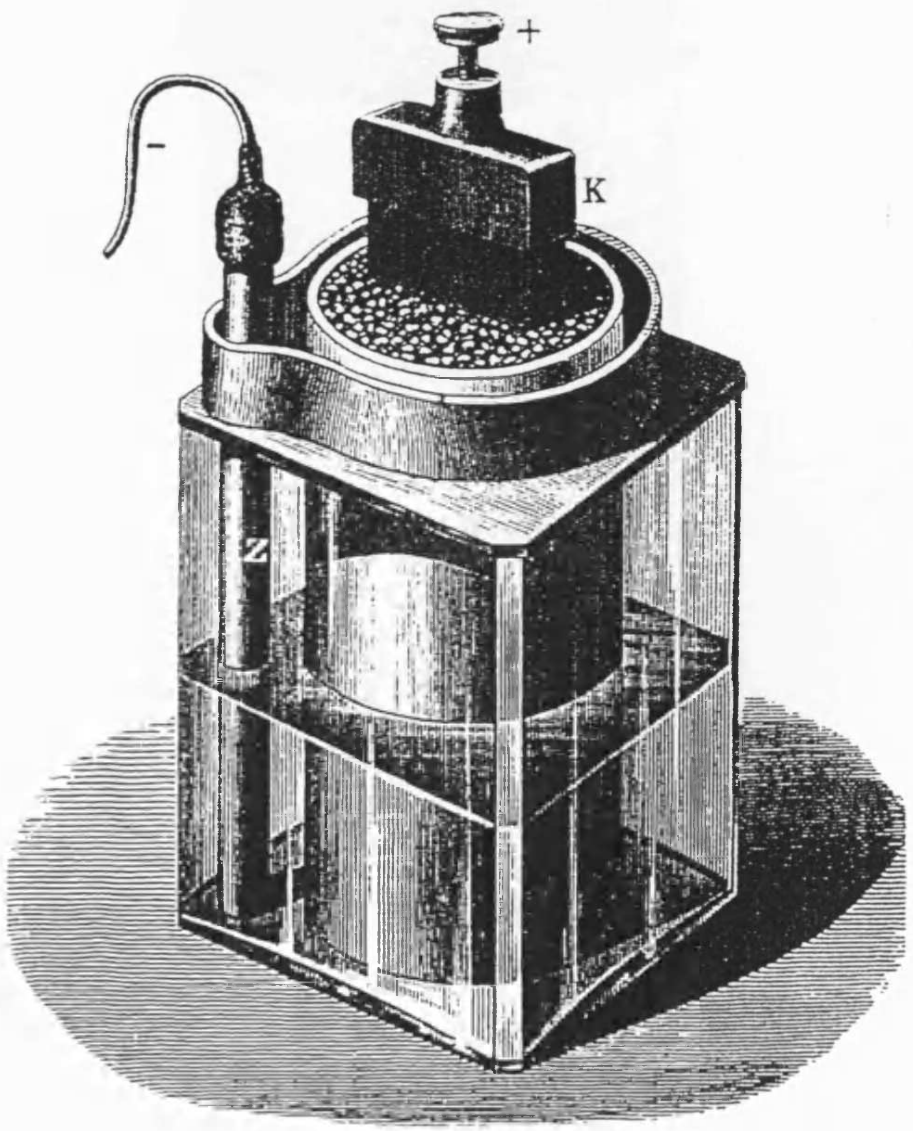

Figure 93 Leclanché cell, late nineteenth century
(source: king, *Development*, p. 252)

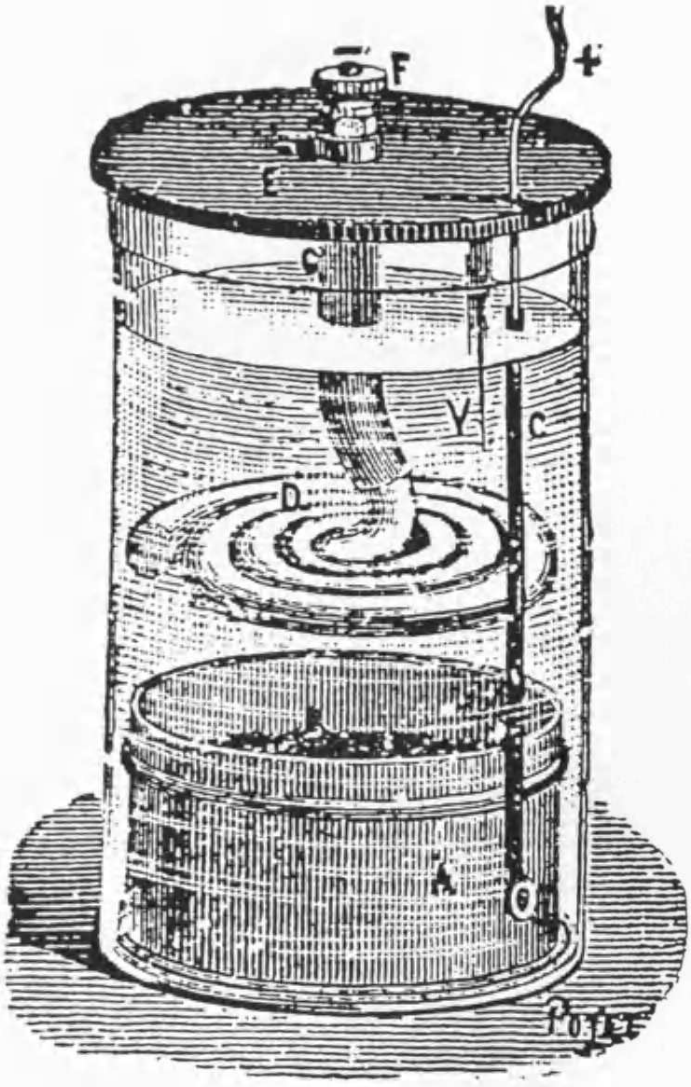

Figure 94 The 'pile' of Lalande and Chaperon
(source: Guéritey, Pierre-Marie, 'Introduction à l'étude des transmissions électropneumatiques dans l'orgue au XIX siécle', *La Flute Hârmonique* 213 (1990), p. 13

We may easily see how battery life was short between the necessary maintenance for renewing the zinc electrodes. Electrolytes also needed replacement from time to time, whilst the interstices of the porous pots were prone to clogging.

APPENDIX III
INVENTION OF THE ELECTROMAGNET

From at least the eighteenth century, scientists were trying to determine the connection between electricity and magnetism. But it was not until 1807 that Hans Christian Oersted (1777-1851), a professor of natural philosophy at the University of Copenhagen, announced his intention to investigate the effects of electricity on the magnetic compass needle. Thirteen years later, Oersted was in a position to publish results that were quickly substantiated by eminent scientists in London, Paris, Geneva and Leipzig. Briefly, Oersted discovered that a current-carrying conductor would cause a suspended magnetic needle to orient itself at right angles to the conductor. By 1821, other workers had demonstrated that the effect of the current on the needle could be enhanced by placing the magnetic needle inside a coiled conductor. Furthermore, if the magnetic needle was to be replaced by one that was not magnetised, it would, in turn, become magnetised. Thus was born the science of electrodynamics.

William Sturgeon, a self-taught physics teacher, is credited with the invention of the first practical electromagnet. Instead of a straight steel core, he used a 'U' shaped soft iron core to concentrate the magnetic force. Unlike steel, soft iron lost its magnetism when the current was switched off. Sturgeon's magnet of 1824[372] (sometimes attributed to 1825 or 1826) was an iron bar 1 ft (305 mm) in length, bent into a horseshoe shape and then wound with 18 turns of copper wire, *vide* Figure 95. The iron core was varnished to prevent the current short circuiting between the turns of bare copper wire. When connected to a single voltaic cell, the electromagnet was capable of lifting a weight of 9 lb (4 kg), or 20 times its own weight. Later on Joseph Henry built a magnet of 59 lb (26 kg) that could lift 2000 lb (907 kg) when connected to a cell with a 5 ft^2 ($0.46m^{2)}$ zinc electrode.

---

372. Sturgeon, William, *Transactions of the Society for the Encouragement of the Arts, Manufactures and Commerce* vol. 43 (1824), p. 3

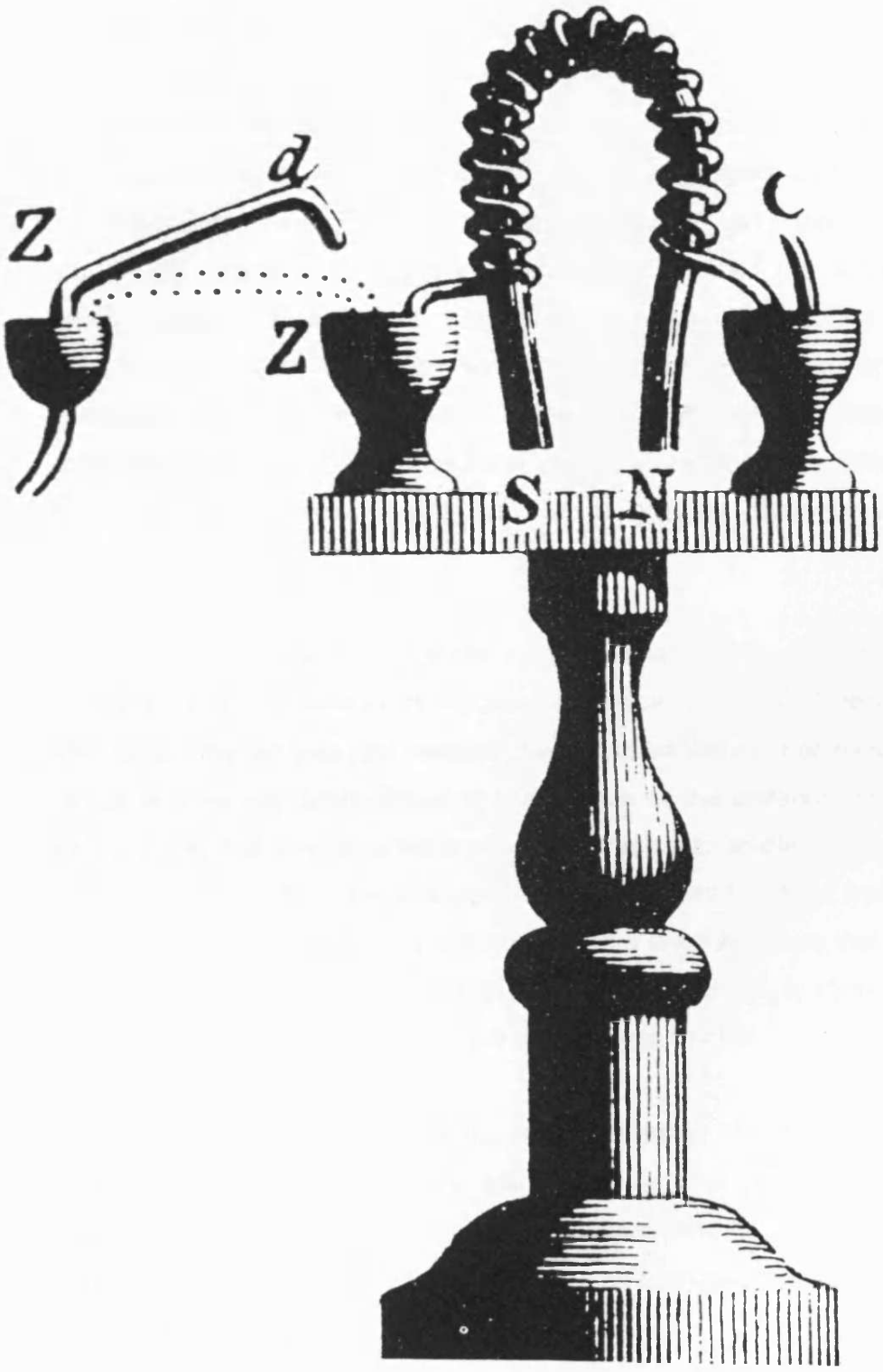

Figure 95 Sturgeon's first electromagnet of 1824

An important finding of M. H. Jacobi[373] in 1840, only twelve years before Pierre Stein's patent for the use of electromagnets in organ-building, was that the greatest magnetic force was produced when the resistance of the coil equalled that of the battery. Henry had already foreseen this in qualitative terms, when he postulated that there were two kinds of electromagnets: a 'quantity' magnet for maximum lifting power using a battery with large area plates (i.e. a powerful current supply having a low internal resistance), and the 'intensity' magnet connected to a battery having a large number of plates (i.e. a battery of several cells having a large overall resistance), and typically used for telegraph work where the long transmission lines had a high resistance, and the required magnetic power for the operation of the telegraph receivers was small. We can now see that organ electromagnets for direct pallet action, slider magnets and other arduous duties require the use of quantity magnets supplied by low resistance cells.

The air gap between the pole(s)of an electromagnet and the armature is of great importance in the design of electro-mechanical systems. Everyone knows that the larger the air gap, the smaller the attractive force. For most situations, the force is inversely proportional to the square of the distance, so we may easily understand that a lever armature that is attracted to an electromagnet core at the opposite end to its hinge and needing a gap of say 6 mm (a typical organ pallet opening) to close the air gap compared with a lever armature that is attracted half way along its length, but with only a proportionate 3 mm to close the air gap is a much more powerful system to pull down a organ pallet.

It may also be understood that the magnetic power of a magnet coil (solenoid) is a function of the number of coil turns and the applied current. For an electromagnet with an iron core, the characteristics of metal cause the curve of magnetic strength versus current to follow an s-shaped relationship that is known as an hysterisis curve.

---

373. Jacobi, M. H., 'On the Application of Electro-Magnetism to the Moving of Machines' Sturgeon's *Annals of Electricity* Vol. 1 (1837), pp. 408-415, 419-444

We must also note that a horseshoe magnet is substantially more powerful than a single coil magnet for the same number of coil turns and the same applied current. This is because the magnetic flux of the horseshoe magnet is concentrated in the air gap between its geometrically close poles. On the other hand, the flux on a single coil magnet is dissipated over a much longer air path between its poles. Worked examples for Stein's organ magnets, carried out by the Wolfson Centre for Magnetics Technology, are given in Appendix IV.

Electromagnets for use in organ actions must have a prompt armature response when attracting and releasing their armatures. Robert Hope-Jones claimed that his low energy electric action chest valves with a movement of a fraction of a mm offered a clear repetition rate of 300 wind puffs per minute. Henry Willis, not to be outdone, said that his proportional pneumatic valves offered 1,000 repetitions per minute. How Willis was able to calculate or measure such a fast repetition rate is unknown to me. What is certain is that no virtuoso keyboard player has the digital dexterity to match a repetition of nearly seventeen Hz. Nor is there any music that is written that requires this speed of articulation.

Pykett carried out a musical analysis of the popular *Toccata* from Widor's fifth organ symphony. He postulates a virtuoso organist attacking this piece at a metronome rate of 120 crotchets per minute (the Hamelle edition of 1901 is marked at 100: perhaps this is a reflection of the inertia of Widor's mechanical Barker lever assisted clavier action on his St.-Sulpice organ). At the modern speed, there needs to be a clear repetition rate of 8 semiquavers per second (8 Hz). The attack and release of the notes must take place in no more than half that time, say 62 milliseconds.

Pykett, C. E., 'Reponse Speed of Electric Actions' http://www.pykett.org.uk/reponse_speed_of_electric_actions.htm 22 October 2001

It is with this benchmark that an electro-magnetic organ action has to be judged. There are several factors that need to be considered. Apart from the purely mechanical aspects that are a function of the mass of the armature, lever, valves rod and the other parts, there is the time needed to accelerate and de-accelerate these parts against the wind pressure.

We must also consider the response time of the magnet itself. When a current is first applied, there is an opposing emf generated by the magnetic field that slows the current growth. Similarly, when the current is switched off, a back emf is generated which slows the current decay. Pykett and Robson have demonstrated that the current growth and decay times are small and of no significance in the achievement of clear repetition rates of the order of 8 Hz.

Robson, T. G., private communication, 5 March 2005

APPENDIX IV

ELECTROMAGNETIC FORCE ANALYSIS

The review of Stein's direct electric action system raised an element of doubt about the magnetic power of the single coil electromagnet in pulling-down a soundboard pallet, *vide* Figure 33, page 102. Stein's patent drawings were scaled so the size of the various magnets and hence the optimum number of coil turns and current was easily determined using the computer model described on pages 103-4.

In calculating the force necessary to pull down a pallet, we need to know the open area of the groove covered by the pallet (width and length may be scaled from the drawings), the wind pressure and the return force exerted by the pallet spring. Stein does not give any information on the two latter properties, so we have made assumptions:

Measured:

Dimensions of the area covered by the pallet: 220 mm by 25 mm (8 5/8 in by 1 in)
Area of the open area : 5,500 mm^2 (55 cm^2)

Assumptions:

Wind pressure : 70 mm (2 3 /4 in) water gauge
Return spring force : 100 g

Since the pallet is hinged at one end and the pull-down is located equidistant from both ends, the minimum magnetic force needed to open the pallet is:

$$f = \frac{2\,(a \times p)}{2} + s$$

Where f = force to open pallet - g
a = open area of pallet – cm^2
p = wind pressure - cm water gauge
s = spring pressure - g

f = 485 g (approx 4.8 newtons)

The maximum power of the Stein single coil magnet (page 103 and Figure 34) occurs when the magnet is wound with 628 turns of copper wire of 1.626 mm diameter. With this winding, the current draw is 1.4 A. Following discussion with the Wolfson Centre for Magnetics Technology at Cardiff University, it kindly agreed that the Centre would calculate the magnetic attraction of the Stein magnet at a range of air gaps between the magnet core and the pull-down armature using its proprietary computer software.[374]

WCMT carried out a magnetic CAD analysis using finite element (FEM) software in January 2004. The results in graphical form are shewn in Figure 96. For a pallet opening of 6mm, the movement at the centre of the pallet is half, i.e. 3 mm. The magnetic force acting on the armature is therefore 0.2 N (approx 20 g) at a current of 1.5 A, and 4.1 N (410 g) at 6 A. These data are valid for a mild steel core. However, a soft iron core was specified by Stein. The magnetic permeability of this material is approximately three times higher than that of mild steel, but the 'open' magnetic circuit is so inefficient that the flux density and hence the magnetic force predicted by the computer model would not be significantly increased . The opening of the pallet requires at least 4.8 N. Such a force would need a current of perhaps 6.5 A and a battery of five cells in series for the coil resistance predicted by the Robson computer programme (page 104). It is unlikely therefore that Stein used the single coil for the clavier action of his 1855 exhibition model.

Accordingly, WCMT was asked to assess the performance of the double coil (horseshoe) magnet shewn in Figure 35. The pallet opening of 6 mm still only requires an air gap of 3 mm for the hinged lever armature. The magnet coils are smaller in length so the number of turns on each bobbin is 440. The WCMT analysis is shewn in Figure 97.

---

374. Hall, Jeremy, Commercial Manager, Wolfson Centre for Magnetics Technology, Cardiff University, a private communication, 29 October 2003. The work was carried out by Faris Alnaemi.

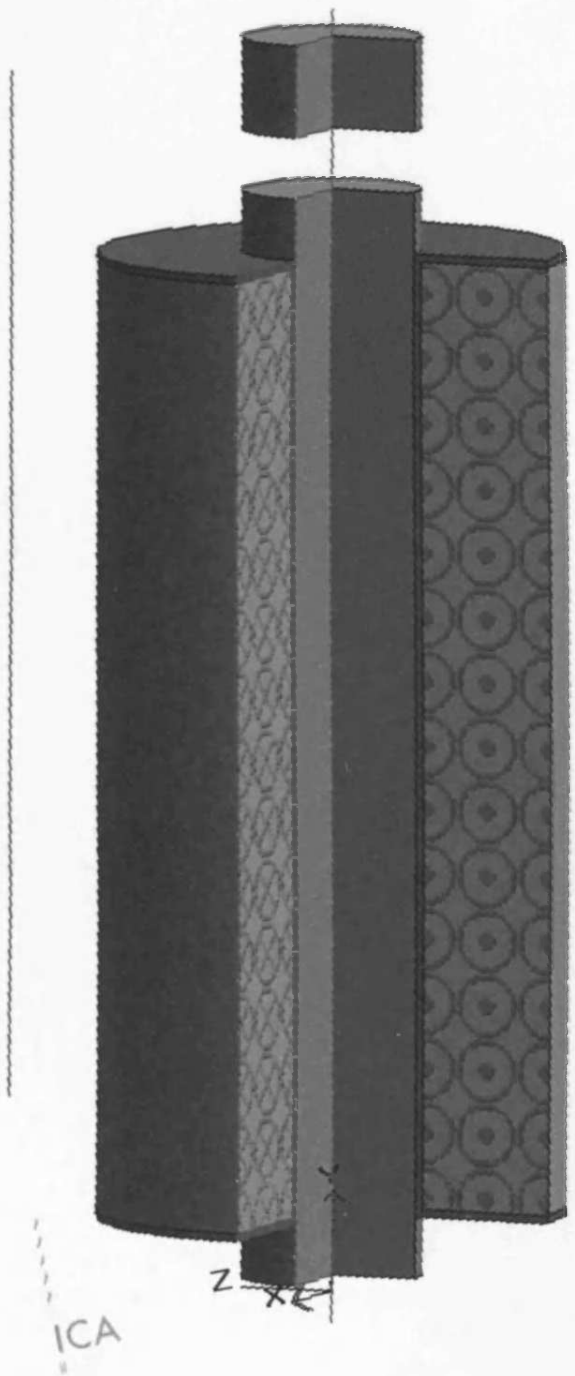

Figure 96 Modelling of the Stein single coil magnet

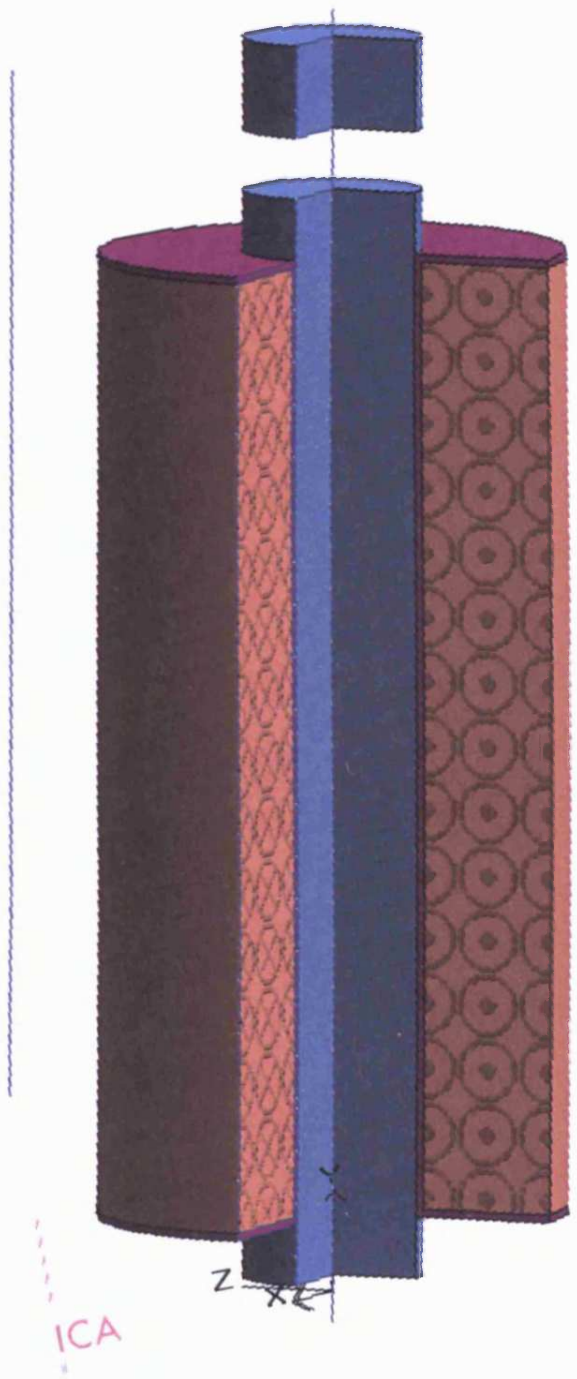

Figure 96 Modelling of the Stein single coil magnet

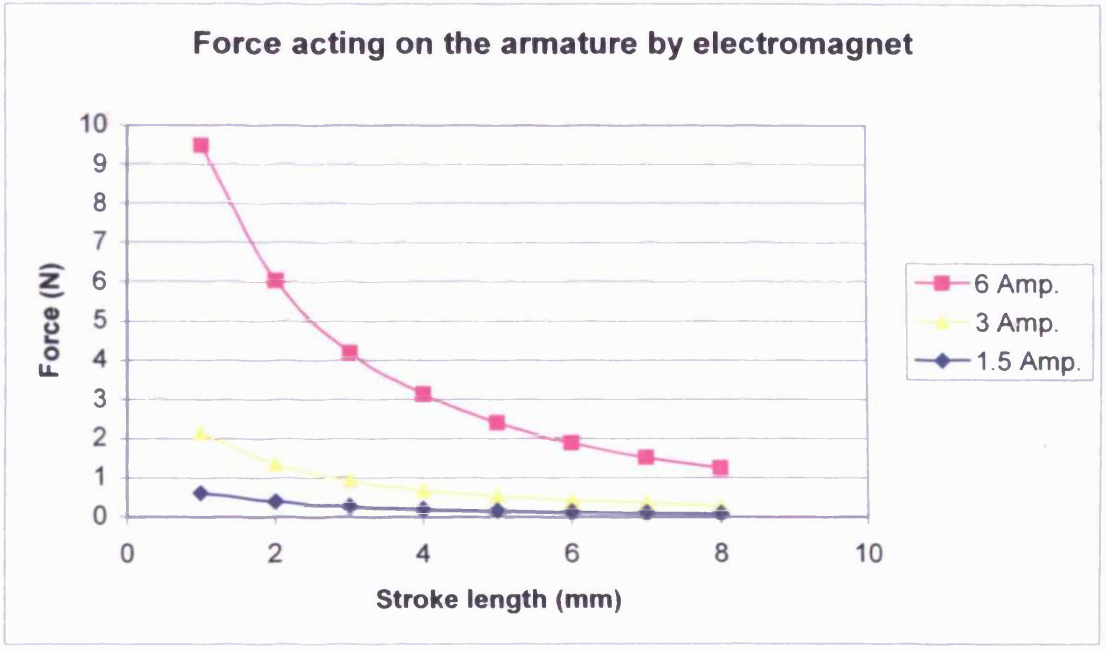

Stein's single coil electromagnet
(Figure 1 *Planche* 1 French patent No. 12988 AD 1852)

coil internal diameter	: 23 mm
coil external diameter	: 60 mm
coil length	:126 mm
number of turns	: 620
coil current at 1.9 V supply	: 1.27 A

Figure 96 Force - air gap characteristics as a function of coil current

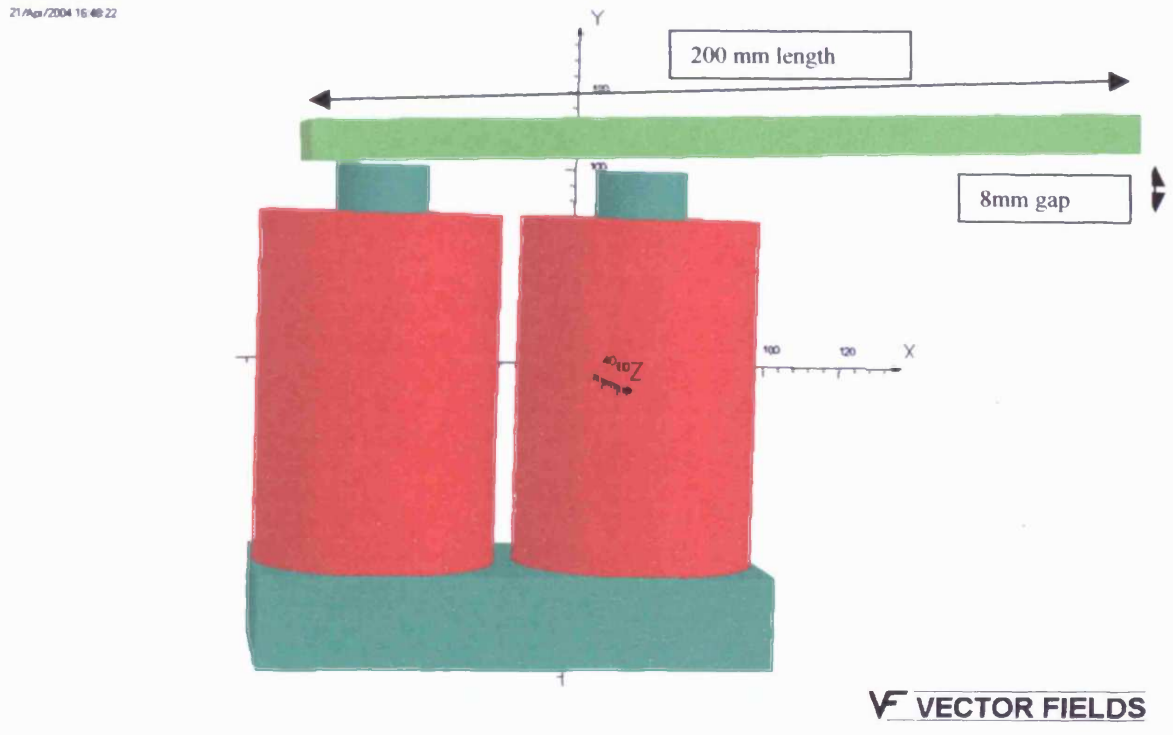

3-D model of the magnet at open state

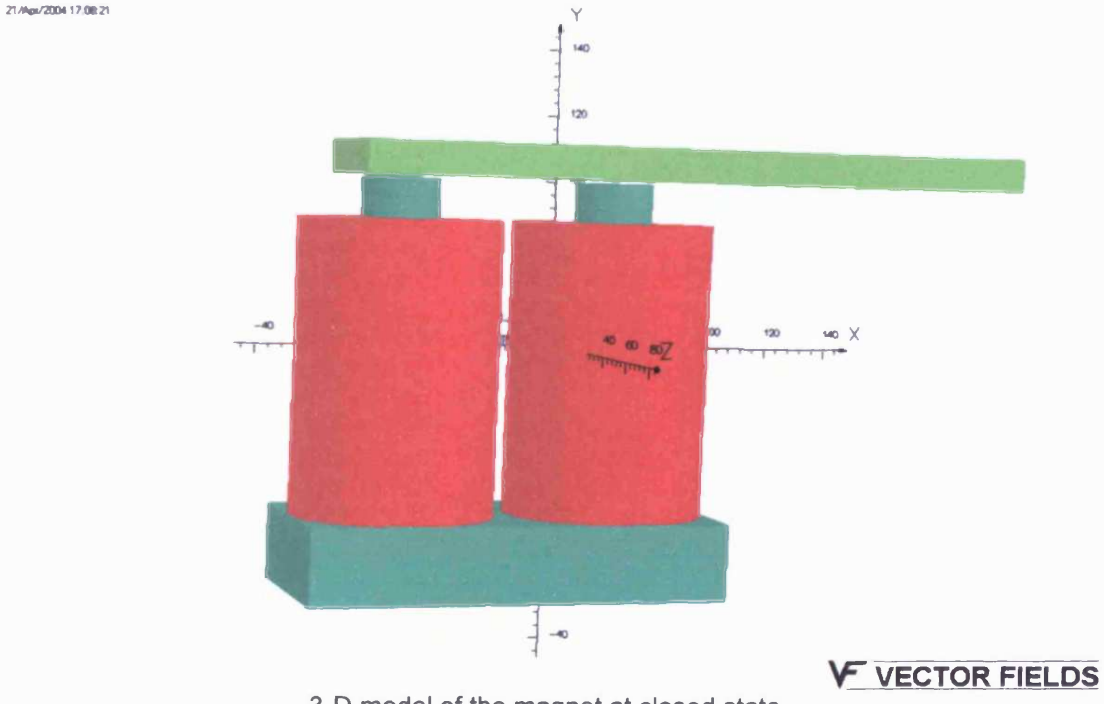

3-D model of the magnet at closed state

Figure 97 Modelling of the Stein horseshoe magnet

(see page 349 for base data)

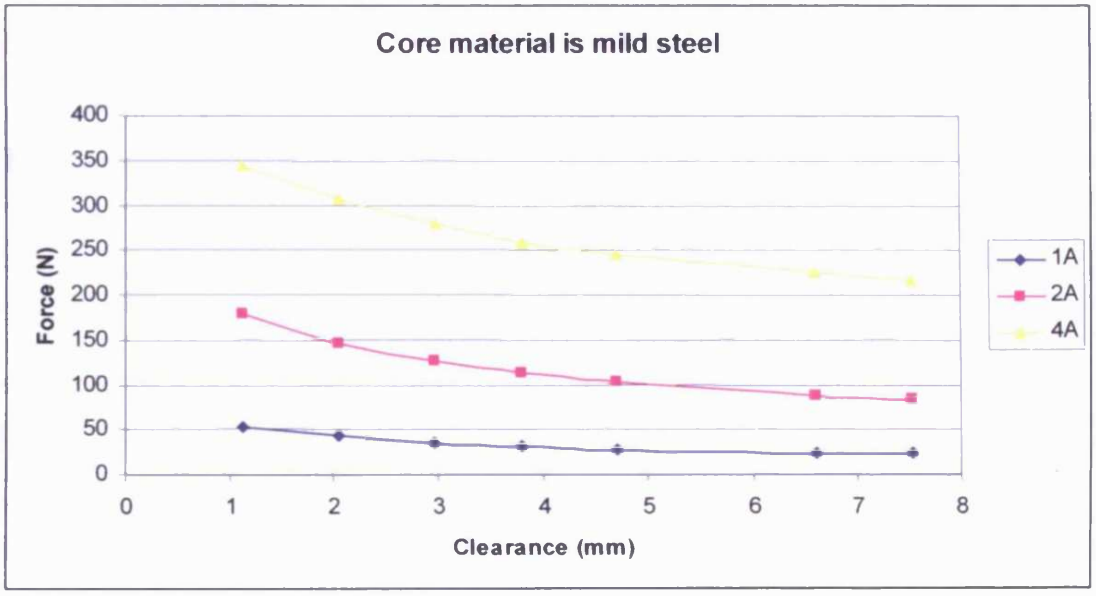

Note: 'Clearance' is the air gap between the pole furthest from the lever (armature) hinge.
1 N is approximately equivalent to 100 g.

Stein's horseshoe electromagnet
(Figure 2 *Planche 1* French Patent No. 12988 AD 1852)

coil internal diameter : 23 mm
coil external diameter : 60 mm
coil length : 88 mm

number of turns per coil : 440 (total 176 for the two magnet cores)
coil current at 1.9 V supply : 1.13 A

Figure 97 Force- air gap characteristics as a function of coil current

The horseshoe magnet is many times more powerful because its magnetic circuit is 'closed, i.e. the magnetic circuit is mainly composed of the ferromagnetic material and the air gaps are minimised. The pull on the pallet with a current of 1A and an air gap of 3 mm is 35 N, i.e. seven times higher than is necessary. The pull reduces to15 N at a current of 0.5 A. We conclude that this was the system of choice for the exhibition model.

In comparison, the modern Otto Heuss direct action pallet magnet, although only a single coil, has its magnetic field effectively 'closed' by a mild steel armature so its performance will be closer to that of a horseshoe magnet that of the single open coil. The magnet coil has 1120 turns, a resistance of 23 Ω and draws 0.5 A at a supply emf of 12 V. The measured pull is 700 g (7 N).[375] This is 47% of the Stein double coil magnet.

375. Otto Heuss GmbH Data Sheet, July 2004, http://212.227.208.81/44/3_7.asp

APPENDIX V

BICHROMATE BATTERY EXPERIMENTS

In an attempt to discover how significant battery performance was for a typical Peschard - Barker system church organ, a research project was undertaken during 2004-2005 in an attempt to obtain quantitative data on the bichromate battery.

Outline of the research project

The three principal objectives of the experimental programme were a) the determination of instantaneous current output at the maximum load (effectively a short circuit condition), b) the longevity of the cell with an average number of pallet electromagnets in circuit, and c) the impact of hydrogen polarisation.

Peschard noted that the electromagnets of the Saint-Pierre de Montrouge organ had a resistance of ten ohms. The current draw of such a magnet supplied by a 4 V battery is 0.4 A. We have assumed that the average number of clavier keys used by a player is five, requiring a total of 2 A, but the actual number at any one time could range from one to eight (Bach's cadences occasionally require seven fingers and a foot, whilst Karg-Elert's Choral Improvisation, Opus 65, No.59 has chords of nine notes for the hands). The number of magnets escalates as clavier couplers are brought into use, so the Choral-Improvisation would need a power supply capable of working at least 31 magnets, say 12-13 A, albeit for occasional and short durations.

In his 1868 patent, one of Barker's claims related to the mounting of two battery jars on the top of a wind reservoir, with the electrode array fixed to an overhead beam. In this way, once the player had finished and blowing had ceased, the reservoir top board dropped, leaving the electrode array suspended above and without the battery jars – an automatic switch, but more importantly, a cessation of the chemical reactions between the zinc and electrolyte that would rapidly shorten the cell's life, *vide* Figure 16.

Barker's drawing was of a high draughting quality, so the size of the battery jars and the electrode array were scaled (with an assumption as to the rise of the reservoir) with some confidence.

The jars had a diameter of 168 mm and the height was 345 mm with a

volumetric capacity of 7-8 litres. Lawson's remark that the batteries of Bryceson's organ at Fort Augustus (previously N.J. Holmes concert organ at Regent's Park) were the size of wash boilers may be somewhat exaggerated.

The construction of a full scale battery would require the use of a large quantity of hazardous chromium chemical with its attendant environmental disposal challenge, so it was decided to build a quarter scale cell with a capacity of 2 litres. The scale-up of the results to full size performance on a simple linear basis of zinc anode area for current output, and electrolyte volume for its longevity, was regarded as secure.

A model cell was constructed using a 2.5 litre capacity jar. The electrolyte was made up to the following formulation (McMillan, *A Treatise on Electro-metallurgy* (1890), p. 51) :

Analar grade potassium bichromate	: 3 ounces (142 g / l)
Concentrated sulphuric acid	: 2 ounces (95 g / l)
Deionised water	: 1 pint

The single zinc electrode (plating grade) dimensions were:

Height	: 330 mm overall, 120 mm immersed
Breadth	: 39 mm
Thickness	: 6 mm
Weight	: 379 g (approx)
Wetted surface area	: 11,034 mm^2 (1.103 dm^2)

Before use the zinc anode was abraded, detergent washed, dried and then amalgamated with mercury (since plating grade zinc is 99.99% pure, amalgamation may not have been necessary).

Both carbon electrodes had the properties :

Height	: 256 mm overall,120 mm immersed
Width	: 39 mm
Thickness	: 4 mm
Wetted surface area	: 10,476 mm^2 (1.05 dm^2)

A drawing of the cell's electrode array is shewn in Figure 98. Note that the carbon-zinc electrode spacing is 6 mm.

The cell electrolyte temperature was controlled, when necessary, by the re-circulation of the electrolyte through a plastic coil heat exchanger immersed in chilled water. The voltage and current were measured using digital meters. Samples of the electrolyte for chemical analysis were taken, and the zinc electrode was weighed to determine weight loss. The cell was contained within a security container as a safety precaution in the event of spillage or breakage of the glass jar.

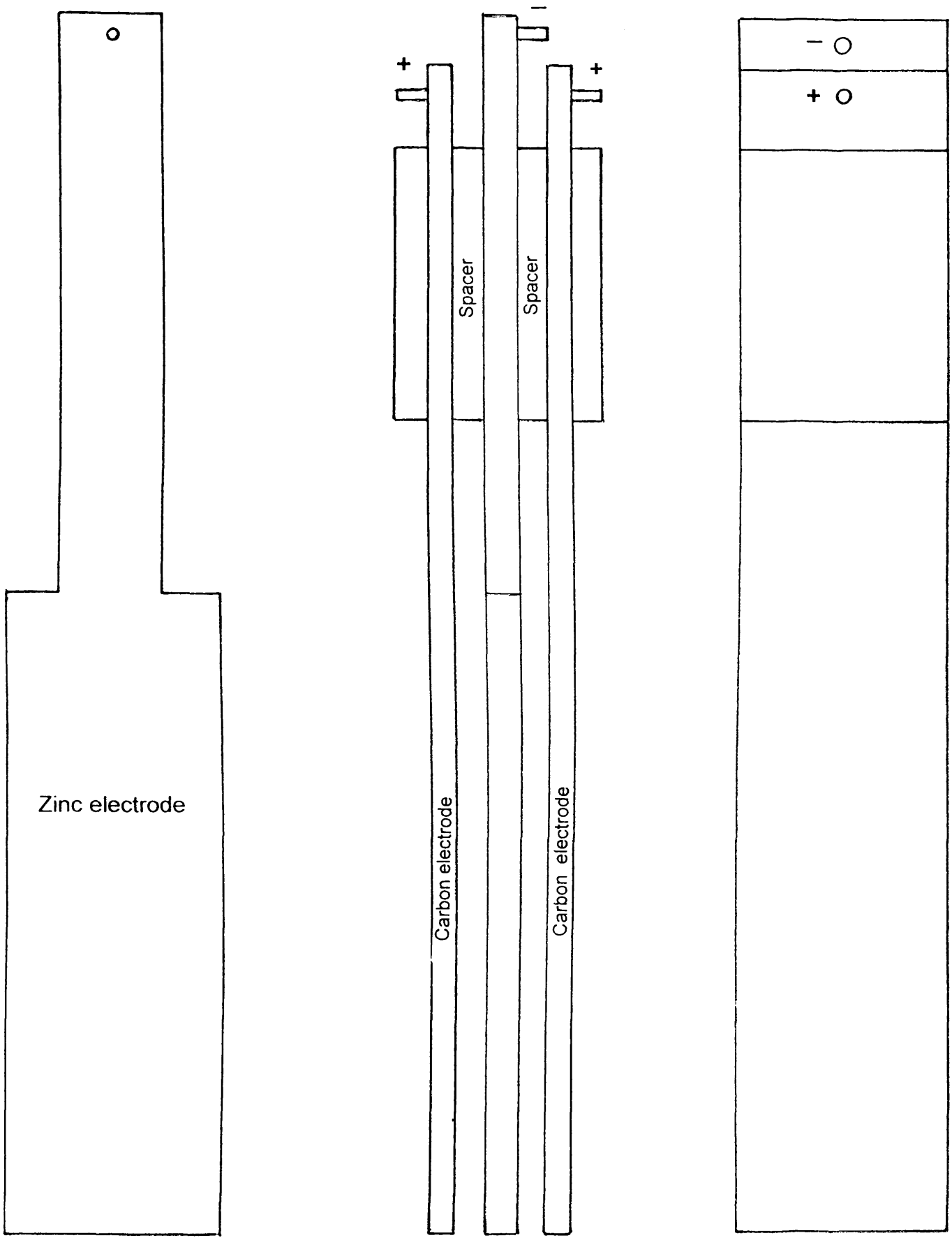

Figure 98 full scale drawing of the experimental electrode array

First experiment – dissolution of zinc under no load conditions

It was well understood in the 1850s that the zinc electrode of a bichromate cell dissolved away and needed to be withdrawn when the cell was not in use. An experiment was conducted to determine the dissolution rate so that the electrochemical dissolution rate could be calculated when the cell was in use.

Two cubic pieces of electroplating grade zinc of known size and weight were degreased, and then immersed for up to 60 minutes in 100 ml of fresh battery electrolyte at 25 °C. There was no agitation apart from an occasional stir. The pieces were withdrawn, washed, dried and weighed after immersion periods of 10, 20 and 60 minutes.

Results

	Test piece A		**Test piece B**
Surface area	: 2,400 mm^2		1,600 mm^2
Initial weight	: 39.209 g		22.496 g
Weight after 10 min	: 38.742 g		
Weight loss	: 0.468 g		
		Weight after 20 min	21.805 g
		Weight loss	0.691 g
Initial weight	: 38.742 g		
Weight after 60 min	: 36.113 g		
Weight loss	: 2.629 g		

Weight loss as a percentage of the initial weight:

	Test piece A	**Test piece B**
10 min immersion	1.19 %	-
20 min immersion	-	3.07 %
60 min immersion	6.78 %	

Weight loss as a percentage of the initial surface area:

10 min immersion	19.5 mg / 100 mm^2
20 min immersion	43.2 mg / 100 mm^2
60 min immersion	109.5 mg / 100 mm^2

Observations

There was no significant chromate film on the test pieces after immersion. After rinsing the zinc surface was an even grey in colour. The electrolyte darkened rapidly as the test pieces dissolved. No hydrogen gassing occurred. The electrolyte temperature rose from 25 to 30°C during the 60 minute immersion period due to the exothermic dissolution reactions.

Conclusions

The rate of zinc dissolution in the battery electrolyte under no-load conditions is linear (±10%) with time and substantial, thereby justifying electrode removal whenever the organ is not being played.

The absence of hydrogen evolution and the rapid darkening of the electrolyte indicate the chemical reduction of hexavalent chromium to the trivalent form, confirming the potential effectiveness of potassium bichromate for the control of hydrogen polarisation.

Second experiment

This experiment was conducted to determine the maximum current output of a single cell. A fresh electrolyte at 20°C was introduced into the battery jar. The no-load emf was measured with a digital voltmeter. A wire wound resistor of 0.1 Ω (±1 %) was connected across the cell output terminals to effectively simulate a maximum load condition. The voltage was continually monitored and the current calculated using ohms law. The electrolyte temperature was also monitored.

Analysis of the results

The electrolyte cooling circuit was not entirely functional due to crystallisation of the electrolyte salts in the plastic cooling circuit during no-flow conditions (on-off temperature control). The temperature therefore fluctuated between 18 and 23°C. It was observed that when the electrolyte was being re-circulated, the enhanced turbulence within the cell had a beneficial effect on current output. The measured emf and deduced current data are shewn in the table below and also presented in graphical form on page 357.

Time-h	emf-V	Current- A	Cell resistance-Ω	Temp- °C	Observations
Phase 1					
14.32	2.01			21	No-load
14.54		10	0.101	22	0.1Ω load
14.55		9.7	0.107	21	
14.56	1.03	9.6	0.109		
14.57	1.00	9.3	0.116	19	
14.58	0.98	9.1	0.121	19	
14.59	0.97	9.0	0.123	19	

15.01	0.96	9.0	0.123	21	Recirculation pump-on
15.03	0.97	9.0	0.123		
15.05	0.94	8.9	0.126	20	
15.07	0.94	8.8	0.128	21	
15.10	0.91	8.5	0.136		
15.13	0.90	8.3	0.142	23	Recirculation pump-off
15.17	0.90	8.2	0.145	23	
15.20	0.88	8.2	0.145		
15.23	0.87	8.1	0.148		
15.27	0.86	8.0	0.151		
15.30	0.84	7.8	0.158		Load disconnected
15.31	1.83				
15.32	1.86			21	
15.35	1.87			23	
15.40	1.88			23	
15.54	1.92			18	
Phase 2					
15.55	0.81	8.4	0.139		Load reconnected
15.57	0.70	6.5	0.209		
15.58	0.60	5.9	0.241		
16.01	0.59	5.6	0.259		
16.03	0.57	5.3	0.279		
16.06	0.55	5.2	0.287		
16.08	0.57	5.2	0.287		
16.11	0.54	5.1	0.294		
16.13	0.54	5.0	0.299		
16.15	0.53	5.0	0.300		
16.17	0.55	5.2	0.287	22	Thermometer agitation
16.19	0.52	4.9	0.309		
16.22	0.52	4.8	0.315		
16.26	0.51	4.7	0.328		
16.30	0.52	4.8	0.319		
16.34	0.48	4.5	0.347		
16.40	0.46	4.3	0.367		
Phase 3					
16.41	0.92	8.6	0.134		Recirculation pump-on
16.42	0.93	8.7	0.131		
16.44	0.94	8.2	0.145		
16.45	0.94	8.6	0.134		
16.50	0.90	8.4	0.139		
16.51	0.88	8.2	0.145	26	
16.54	0.87	8.1	0.148	26	
16.58	0.83	7.8	0.158	26	
16.59					Recirculation pump-off
17.01	0.5	4.6	0.337		
17.02					Run stopped

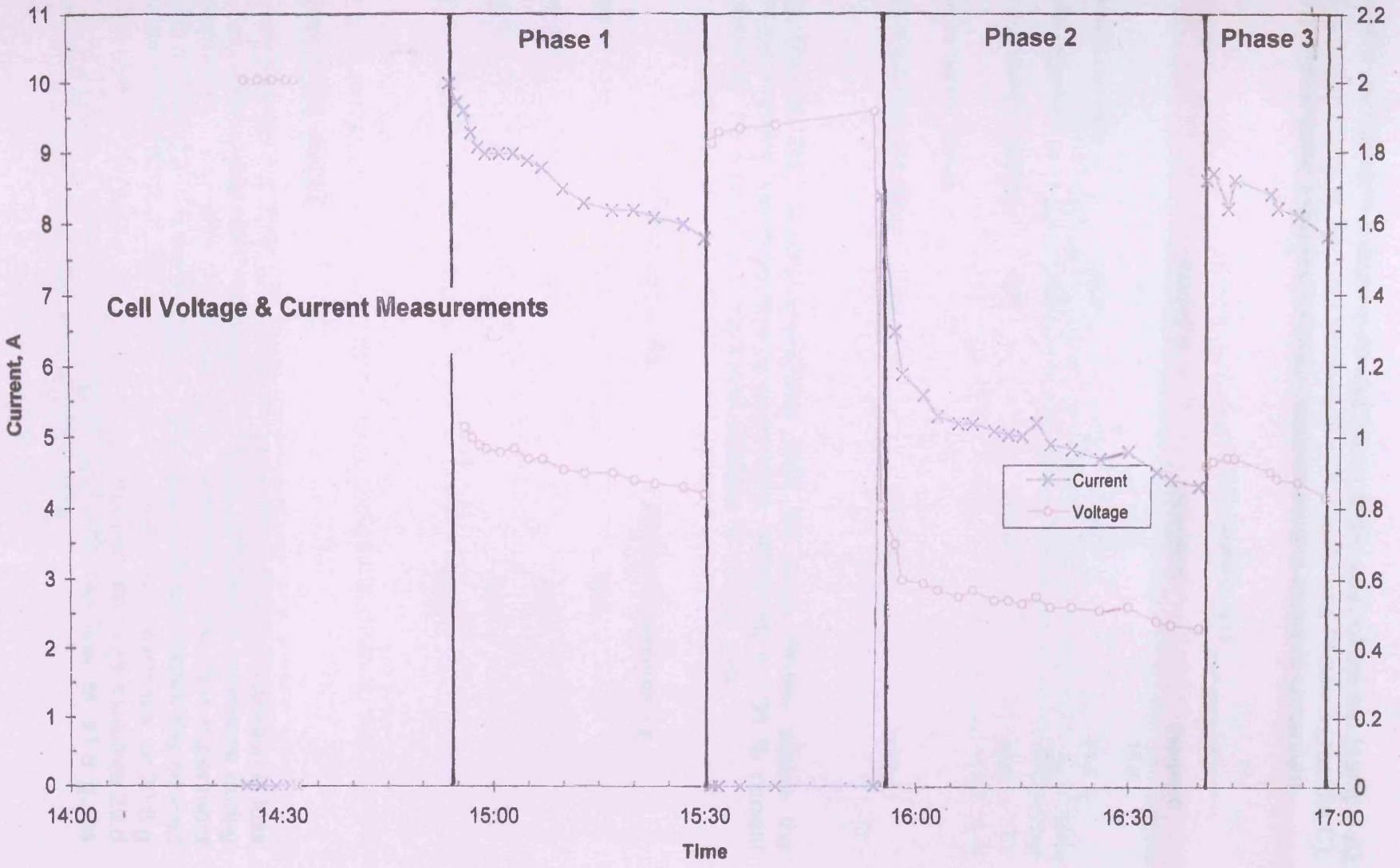
Phase 1
Phase 2
Phase 3
Cell Voltage & Current Measurements
Current, A
Time
Current
Voltage
11
10
9
8
7
6
5
4
3
2
1
0
2.2
2
1.8
1.6
1.4
1.2
1
0.8
0.6
0.4
0.2
0
14:00
14:30
15:00
15:30
16:00
16:30
17:00

Chemical analyses

A control sample of the electrolyte was taken at the start of the run (sample A) and samples taken at the end of Phase1 (sample B) and Phase 3 (sample C). The samples were analysed for zinc, hexavalent and trivalent chromium.

	Concentration – g / l		
	Sample A	**Sample B**	**Sample C**
Zinc	1.0	9.4	15.9
Hexavalent chromium	43.5	40.0	37.5
Trivalent chromium	0.8	1.4	8.5
Total chromium (by addition)	44.3	41.4	46.0
Electrolyte volume - 2 litres			
Weight of zinc in the electrolyte	2.0 g	18.8 g	31.8 g

Integration of the current-versus-time data for each Phase allows the calculation of the sacrificial zinc consumption, assuming a 100 % current efficiency i.e. 1 Ah being equal to the dissolution of 1.22 g zinc.

	Cell output - Ah	**Zinc consumption - g**
Phase 1	5.1	6.2
Phase 2	3.8	4.6
Phase 3	2.9	3.5
Total	11.8	14.3

Analysis of the results

The dissolved zinc is 31.8 g, so that due to electrochemical dissolution is less than half, suggesting that substantial chemical dissolution continues during cell operation. The zinc dissolution data obtained in the first experiment indicate a chemical dissolution rate of 109.5 mg / 100 mm^2 under the no-load condition, equivalent to a loss of 12.1 g / h from the zinc electrode, or 20.6 g over the overall run period of 102 min. The total zinc loss was therefore 20.6 + 14.3 = 34.9 g. This is in fair agreement with the loss of 31.8 g, as determined by chemical analysis of the electrolyte.

We also found that:

1. The model bichromate cell is capable of supplying a current as high as 10 A for short periods

2. Without hydraulic turbulence, the short circuit output fell by 20-25% within 30 minutes

3. Cell recovery without hydraulic turbulence was only 80 % after a no-load rest of 20 minutes

4. The strong oxidising property of the electrolyte controls hydrogen polarisation, but after 90 minutes at short circuit load, trivalent chromium build-up reached 18% of the total chromium, and at this level, the effectiveness of the hexavalent chromium in controlling polarisation was diminished.

A supplementary run was made with the partially spent electrolyte. The zinc electrode was cleaned and abraded, but not amalgamated. The load resistor was replaced by one of 1.6 Ω to allow a current output of around 1 A; this being equivalent to our expectation of the average current demand of the Peschard-Barker electric action, scaled down by a factor of 8 to recognise the quarter scale model cell and also Barker's full-scale twin cell (in series) configuration. The results are shown below:

Time-h	emf-V	Current-A	Cell resistance-Ω	Temp-°C	Observations
17.41	1.84				open circuit
17.42	1.53	0.94	1.6	19	1.65 Ω load
17.45	1.54	0.94	1.6	19	
18.08	1.48	0.90	1.6	19	
18.26	1.47	0.89	1.6	20	
18.40	1.45	0.88	1.6	21	
19.00	1.44	0.87	1.6	21	
19.21	1.40	0.84	1.7	21	
19.40	1.36	0.83	1.6	21	stirred
19.53	1.28	0.77	1.7	22	
20.15	1.20	0.72	1.7	22	
20.30	1.20	0.72	1.7	22	
20.56	1.10	0.67	1.6	22	
21.36	0.99	0.58	1.7		
21.49	1.30	0.79	1.6	22	stirred

Weight of zinc electrode at the start: 341 g
Weight of zinc electrode at the end : 333 g

Analysis of the supplementary run

The run lasted just over 4 hours and the average current output was 0.79 A. There was a steady decline in the output, with a noticeable increase in rate after the first two hours. At the end of the run, stirring appeared to be effective in recovering the output for a short time at least.

Conclusion

The first part of the second experiment confirms that a bichromate battery with a zinc electrode surface area of not less than 1 dm^2 and a carbon-zinc electrode spacing of no more than 6 mm is able to provide a short-term output of up to 10 A.

The rate of chemical dissolution of the zinc during no load **and** load conditions is substantial, and it is therefore an important factor in determining electrode life.

The experimental work demonstrated that turbulence is essential for maximising current output and the operational effectiveness of the battery. Bryceson's concert organ exhibit at the International Inventions Exhibition of 1885 had a gas engine for raising the wind and a 'reciprocating battery' for the electric action. Was the reciprocation a means of generating turbulence by imparting a regular motion from the gas engine to the electrode array? Some electroplating systems today use a similar mechanism - it is called cathode rod agitation. If so, Bryceson's ingenuity was outstanding; he truly deserved his award of a Gold Medal.

The supplementary run did not provide enough data to estimate the operational life of the battery with organ use in typical church conditions, due to the electrolyte being degraded by the earlier experiment where the battery was operated under short circuit conditions. Another run was therefore undertaken using a fresh batch of electrolyte with an electrical load of 1 A to replicate on the pilot scale the likely full scale operating conditions for an electric organ action battery, and specifically to assess the validity of operational life data suggested by Henry Bryceson, C. A. Edwards and Hopkins & Rimbault. The results are shown overleaf.

Long term run

Anode dimensions
- width : 37 mm
- length : 118 mm
- thickness : 4 mm
- area : 9,824 mm^2 (0.982 dm^2)

Weight : 263 g

9 March 2005

time	emf – V	current – A	temp-°C	
15.30	1.99	nil		
15.31	1.76	0.92	15	Run started
16.00	1.74	0.85		Lift and shake
16.31	1.74	0.91		
17.10	1.71	0.90		Lift and shake
17.11	1.72	0.91		
18.35	1.68	0.88		Lift and stir
18.36	1.69	0.88		
19.45	1.60	0.85		Lift and stir
19.46	1.61	0.87		
20.30	1.60	0.86	28	Run stopped

Operational time : 5 h
Average emf : 1.7 V
Average current : 0.88 A
Load resistance : 1.9 Ω (calculated)

10 March 2005

08.45	1.60	0.86		Run started
09.45	1.46	0.78		Lift and stir
09.46	1.55	0.84		
09.55	1.46	0.78		Run stopped
11.10	1.58	0.84		Run started
11.30	1.38	0.74		Run stopped
12.00	1.52	0.83		Run started
12.30	1.34	0.71		Lift and stir
12.31	1.51	0.81		Run stopped
14.00	1.31	0.70		Run started
14.01	1.50	0.80		Lift and stir

14.30	1.30	0.69	Lift and stir
14.31	1.50	0.88	Run stopped
15.10	1.50	0.78	Run started
15.40	1.20	0.65	Lift and stir
15.41	1.45	0.76	Lift and stir
16.05	1.30	0.62	

Operational time : 3 h
Average emf : 1.4 V
Average current : 0.75 A
Load resistance : 1.9 Ω (calculated)

17.10	0.75	0.34	Lift and stir
17.11	1.30	0.69	Run stopped

Final anode weight : 240 g

Findings

The data suggest that the model battery had a life of eight hours before the current dropped to from an average of 0.82 A over the first hour to an average of 0.68 A for the final hour: that is a drop of 17%, The average output of the battery being 0.75 A. Thereafter, the output declined rapidly as the battery reached the end of its useful life.

The average current draw of the Saint-Pierre de Montrouge organ was 2 A (five notes with magnets, each drawing 0.4 A). Since the model battery is quarter scale, we might expect the life of a full-scale battery to be:

$$8 \times 4 \times 0.8 / 2 = 12.8 \text{ h.}$$

At a church organ usage time of three hours per week, we may envisage a battery life of little more than four weeks. This experience does not accord with the contemporary anecdotal reports that gave a battery life of three to five months. Although the run had some 'off times' between operational periods, I was not able to replicate the much shorter 'on times' that would have occurred during a church service. It is possible that the shorter playing times and the more frequent electrode withdrawals allowed hydrogen gas to disperse from the carbon cathodes, so that the life of the bichromate depolariser may have been prolonged. Further research is indicated.

Bichromate battery electrolytes

There is uncertainty about the formulations used for making-up the battery electrolyte. Apart from the several diverse 'recipes' quoted in the literature, there is uncertainty as to the concentration of sulphuric acid that was employed. Whilst 'oil of vitriol' may be assumed to be 96% or more, with a high degree of confidence, the simple statement '3 ounces of sulphuric acid' in a formulation, whilst perhaps being meaningful to a chemist in the nineteenth century, is of little help today.

I have found seven formulations in the literature and no doubt there could be found many more. The known formulations are listed on the next page. For the sake of convenience, the Imperial measurements are converted to the metric system. The range of potassium bichromate concentrations is seen to be substantial. For example, we see that the salt concentration has a range varying from 1 unit / unit of solution to 3 units / unit of solution. The qualitative anecdotal evidence suggests however that the bichromate concentration approaches saturation. This would be expected as the salt's duty is that of a depolariser, and as such, has a powerful influence on the longevity of the battery.

The dissolution of the zinc anode whilst current is not being drawn is a major disadvantage. The dissolution rate at these times is almost certainly a function of the free sulphuric acid concentration. The formulation that I chose for the experimental work does have a lower sulphuric acid content than that of all the others except Numbers 3 and 5 of those listed overleaf.

Today (and probably in the nineteenth century), sodium bichromate ($Na_2Cr_2O_7.2H_2O$) is much cheaper than the potassium salt ($K_2Cr_2O_7$). Allowing for the hydrated form of the sodium salt, it is still several times more soluble in water over the operational temperature range of a church organ battery:

	Weight %	
Temp - °C	**Sodium salt (di-hydrate)**	**Potassium salt**
0	71	3.7
10	72	7.3
20	73	11.5
30	74	15.9

Given that the electrical conductivity increases with concentration, why did the Victorians not choose the cheaper sodium salt? Perhaps the higher mobility of potassium ions at the electrode diffusion layer is relevant.

Potassium bichromate formulations

Formulation	Concentration g / l Potassium bichromate	Sulphuric acid
1,	301	267
2.	142	95
3.	142	72
4.	200	240
5.	130	16
6.	100	240

Chromic acid formulation

	Concentration g / l Chromic acid	Sulphuric acid
7.	150	50

Formulation sources:

1. Marshall, Percival, *Small Accumulators,how made and used. An elementary Treatise on Electric Batteries* (London: The Model Engineer, 1899), p. 24

2. Urquhart, John W., *Electric Light* (London: Crosby, Lockwood & Co., 1880), p. 16

3. Watt, Alexander, *Electro-deposition* (London: Crosby Lockwood & Co., 1889), p. 15

4. Mantell, C.L., *Industrial Electrochemistry* (New york: Mcgraw-Hill, 1950), p. 165

5. Marshall, Percival, *Small Accumulators* p. 35

6. Mcmillan, Walter G., *A Treatise on Electrometallurgy* (London: Charles Griffin & Co., 1890), p. 51

7. Marshall, Percival, *Small Accumulators* p. 24

The solubility of the potassium salt at 20°C is 11.5 weight %, equivalent to 125 g / l. We can see therefore that formulations 1 and 4 are seriously flawed, and must be discounted. Formulations 2, 3 and 5 have potassium bichromate concentrations that are certainly saturated at 20°C and thus appear to be realistic, although No 5 has a very low sulphuric acid concentration. No. 2 is the formulation that I used for the experimental work.

APPENDIX VI

BT TELEPHONE DIRECTORIES: ANALYSIS FOR THE NAME BRYCESON

149 *The Phone Book* current directories for the United Kingdom were scrutinised for the name of Bryceson (exact spelling). Eleven entries were found, disregarding 'duplicate' entries for subscriber names and addresses, which occasionally occurred in two geographically adjacent directories. Addresses are limited to the town/city only. All entries and the notes are correct as at May 2002.

No	TITLE	ENTRY
284	Portsmouth	Major A.K .Bryceson[1] Arundel
285	Isle of Wight	A. Bryceson Ventnor
320	Oxford and District	Dr A. Bryceson Tackley
326	Hemel Hempstead	W.L. Bryceson Tring
335	Bishop's Stortford, Harlow & District	A.M. Bryceson Royston
520	Chester and District	M.E. Bryceson Mollington
526	Plymouth, South West	W.Bryceson[2] Ivybridge
532	Hastings, Rother & Weald	V. Bryceson[3] Little Com
620	London	A. Bryceson S.W.10
		P.A. Bryceson Kensington
		S. Bryceson Islington

Notes

1. Deceased 25 years ago. Wife alive. Private communication from Mrs A. K. Bryceson
2. Son of Dr. A. Bryceson of Tackley, now living in Perth, Australia. Private communication from Dr A. Bryceson.
3. Father of S. Bryceson of Islington. Private communication from V. Bryceson.

Telephone communications with the above persons resulted in only one who was aware of the Bryceson organ-building ancestry, Dr A. Bryceson of Tackley. Subsequently I met A.D.M. Bryceson, Professor Emeritus of the London School of Hygiene and Tropical Medicine, at which he tabled a useful but incomplete family history chart prepared by David Mobbs, a Bryceson family genealogist in 1994. The A.D.M. Bryceson line descends from John Bryceson of Perth through his son William, a brother of Henry Bryceson, the founder of the organ-building firm.

APPENDIX VII

SURVEY OF THE LONDON TRADE DIRECTORIES

1796-1917

Source: London directories from the Guildhall library 1677 – 1900, now in the Westminster City Archive, and available in microfiche format.

Spellings, abbreviations and the use of capital letters as found.

For convenience, I use 'f' in place of the letter ſ (s) commonly used in the trade directories up till the early 1820s.

YEAR	DIRECTORY	ENTRY	ADDRESS
1801	Kent's Directory	Brycefon Henry, Organ-builder	3, Little Thames Street, St. Catherine's
1802	The Poft-Office Annual Directory	Brycefon, H. Organ-builder	Thames Street, St. Catherine's
1802	Kent's directory	Brycefon, Hen. Organ-builder	3, Little Thames-Street, St. Catherine's
1802-1803-1804	Holden's Triennial Directory	Bryceson Hen. Organ-builder	3, little Thames street, St Catherine's
1803	Kent's Directory	Brycefon, Hen. Organ builder	3, Little Thames Street, St Catherine's
1803	The Poft-Office Annual Directory	Brycefon H. Organ builder	Thames Street, St Catherine's
1804	The Poft-Office Annual Directory	Brycefon H. Organ builder	Thames Street, St Catherine's
1804	Kent's Directory	Brycefon H. Organ-builder	3, Little Thames Str, St Catherine's
1805-1806-1807	Holden's Triennial Directory	Bryceson, Henry. Organ-builder	3, Little Thames st, St Catherine's
1806	Kent's Directory	Bryceson, Hen. Organ-builder	3, Little Thames st St Catherine's
1807	Kent's Directory	Bryceson. Hen. Organ-builder	3, Little Thames st St Catherine's
1807	Poft Office Annual Directory	Bryceson. Hen. Organ-builder	Thames ftreet, St Catherine's
1808	Kent's Directory	Bryceson, Hen. Organ-builder	3, Gt. Windmill-st, Haymarket
1808	Poft Office Annual Directory	Brycefon H. Organ-builder	Thames ftreet, St Catherine's
1808	Holden's Triennial Directory	Bryceson, Henry, organ-builder	3, Little Thames st, St Catherine's
1809	Kent's Directory	Bryceson Hen. Organ-builder	22, Market st. St.James's
1809	Poft Office Annual Directory	Brcyefon H. Organ-builder	3 Gt. Windmill ftreet, Haymarket
1809-1810	Holden's Triennial Directory	Bryceson, H. organbuilder Bryceson, H. organbuilder	Thames st, St. Catherine's 3, Great Windmill st
1811		Bryceson, H. organbuilder	3, Great Windmill st
1810	Poft Office Annual Directory	Brycefon H. Organ-builder	3 G. Windmill ftreet, Haymarket

1811	Poft Office Annual Directory	Brycefon H. Organ-builder	22, Market ftreet, St. James's
1811	Kent's Directory	Bryceson, Hen. organ-builder	22 Market str St James's
1811	Holden's Directory	Bryceson, Hen. organ builder	22,Market st. St James's
1812	Kent's Annual Directory	Brycefon H. Organ-builder	22, market.str. St. James's
1812	Poft Office Annual Directory	Brycefon H. Organ-builder	22 Market- ftreet, St James's
1813	Poft Office Annual Directory	Brycefon H. Organ-builder	22 market ftreet, St James's
1813	Kent's Directory	Bryerson Hen. organ-builder	22, Market str, St James's
1814	Kent's Original London directory	no entry	no entry
1814	Poft Office Directory	Brycefon H. Organ-builder	22, Market-ftreet, St James's
1815	Poft Office Directory	Brycefon H. Organ-builder	22, Market-ftreet, St James's
1815	Kent's Original London Directory	No entry	No entry
1816	Kent's Original London Directory	Bryceson Hen. organ & pianoforte- maker	38, Long-acre
1816	The Post Office London Directory	Brycefon H. Organ-builder	38, Long-acre
1817	Kent's Original London Directory	Bryceson. Hen. organ & pianoforte-maker	38, Long acre
1817-1818-1819	Underhill Triennial Directory	Bryceson H. (organ builder)	22 Market Street, St. James's
1817	Johnstone's London Commercial Guide	Bryceson, H. Organ & pianoforte maker	38, Long Acre, Drury Lane
1818	Kent's Original London Directory	Bryceson Hen. organ & pianoforte-maker	38, Long-acre
1818	Johnstone's London Commercial Guide	Bryceson H. organ & pianoforte maker	38 Long-Acre, Drury
1818	The Post Office London Directory	Brycefon H. Organ-builder	38, Long-acre
1819	Kent's Original London Directory	Bryceson Hen. organ & piano-forte-maker	38 Long-acre
1819	Robson's New London Directory	Bryceson H. organ builder	38 Long Acre
1820	Post Office London Directory	Brycefon H. Organ-builder	38, Long-acre
1821	Post Office London Directory	Brycefon H. Organ-builder	38, Long-acre

1822	Post Office London Directory	Brycefon H. Organ-builder	38, Long-acre
1822	Robson's London Commercial Directory	Bryceson Hy. Organ builder	38 Long Acre
1822	Kent's Original London Directory	Bryceson Hen. organ & piano-forte-maker	38 Long acre
1822-1823	Pigot and Co.'s Commercial Directory	Bryceson Hy	12 Greek-st, Soho
1822-1823-1824	Triennial Directory	No entry	No entry
1823	Post Office London Directory	Brycefon H. Organ-builder	38, Long-acre
1823	Kent's Original London Directory	Bryceson Hen. organ & piano-forte-maker	38 Long Acre
1823	Robson's The Fifth Edition	Bryceson Hy, Organ builder	38 Long Acre
1823	Post Office London Directory	Brycefon H. Organ-builder	38, long Acre
1823-1824	Pigot and Co's Commercial Directory	Bryceson Hy Organ builder	38 Long Acre
1824	Post Office London Directory	Brycefon H. Organ-builder	38, Long Acre
1824	Kent's Original London Directory	Bryceson Hen. organ & piano-forte-maker	38, Long Acre
1824	Pigot and Co's Commercial Directory	Bryceson.Hy,	12, Greek Street, Soho
1825	Post Office London Directory	Bryceson H. organ builder	38 Long Acre
1825	Kent's Original London Directory Second edition for the year	Bryceson Hen. organ & piano-forte-maker	38, long Acre
1826	Kent's Original London Directory	Bryceson Hen. organ & piano-forte-maker	38, Long Acre
1826	The London Post office Directory	Bryceson H. Organ-builder	38 Long acre
1826-1827	Robson's The Seventh Edition	Organ builder	38 long Acre
1827	The London Post Office Directory	Bryceson H. Organ builder	38 Long Acre
1827	Kent's Original London Directory	Bryceson Hen.organ & piano-forte-maker	38 Long Acre
1827	Pigot & Co's Commercial	Bryceson H. organ builder	38 long Acre

	Directory		
1827-1828	Pigot & Co's Commercial Directory-Third Edition	Bryceson Henry organ builder	38 Long Acre
1828	Kent's Original London Directory	Bryceson Hen. organ & piano-forte-maker	38 long Acre
1828	The London Post Office Directory	Bryceson H. Organ-builder	38 Long Acre
1828	Robson's, 8th Edition	Bryceson H. organ builder	38 long Acre
1828	Pigot Metropolitan Directory	Bryceson H. organ builder	38 long Acre
1828-1829	Pigot and Co Directory	Bryceson H. organ builder	38 long Acre
1829	Robson, 4th Edition	Bryceson H. organ builder	38 long Acre and 5 Tottenham ct rd
1829	The Post office London directory	Bryceson H. Organ-builder	5 tottenham Court, New rd
1830	Robson, 9th Edition	Bryceson Henry, organ builder	5 Tottenham ct, New road
1830	The Post office London Directory	No entry	No entry
1831	The Post Office London directory	No entry	No entry
1831	Robson's London Directory 11th Edition	Bryceson Henry, Organ builder	5 Tottenham ct, New road
1832-1833-1834	Pigot and Co's National London & Provincial Commercial Directory	Bryceson Henry Organ Builder	5 Tottenham ct, New rd
1832	The Post Office London directory	No entry	No entry
1832	Robson's London Directory 12th Edition	Bryceson H. Organ builder	5 Tottenham ct, New rd
1833	Robson's, 13th Edition	Bryceson H. Organ Builder	5 Tottenham ct. New rd
1833	The Post Office London Directory	No entry	No entry
1834	The Post Office London Directory	Bryceson H. Organ builder	5 Tottenham court New road
1834	Robson's London Directory	Bryceson H organ builder	5 Tottenham court, New rd
1835	Robson, 15th Edition	Bryceson H. Organ builder	5 Tottenham ct, New rd
1835	The London Post Office Directory	Bryceson H. Organ-builder	5 Tottenham ct, New road
1836	Robson, 16th Edition	Bryceson H. Organ builder	5 Tottenham ct, New rd
1836	Pigot and Co	Bryceson Henry Organ builder	5 Tottenham ct New rd

1836	The London Post Office	Bryceson.H. organ-builder	5 Tottenham ct, New road
1837	The London Post Office Directory	Bryceson h. Organ-builder	5 Tottenham ct, New road
1838	The London Post Office Directory	Bryceson Henry, Organ-builder	5 Tottenham ct, New road
1838	Robson's London Directory 18th Edition	Bryceson H. organ builder	5 Tottenham ct, New rd
1839	The London Post Office Directory	Bryceson Henry, Organ-builder	5 Tottenham ct, New road
1839	Pigot and Co	Bryceson Henry, Organ builder	5 Tottenham court New rd
1839	Robson's London Directory 19th Edition	Bryceson H. Organ builder	5 Tottenham ct, New rd
1840	Robson's London Directory 20th Edition	Bryceson H, Organ builder	5 Tottenham ct. New rd
1840	Kelly's 1st Issue 43th Edition	Bryceson Henry, organ builder	5 Tottenham ct New road
1840	Kelly's 2nd Issue 45th Edition	Bryceson Henry, organ builder	5 Tottenham ct. New road
1840	Pigot and Co	Bryceson Henry organ builder	5 Tottenham court New rd
1841	Robson's London Directory	Bryceson henry Organ builder	5 Tottenham ct New rd St Pancras
1841	Kelly's Post Office London Directory	Bryceson Henry organ builder	5 Tottenham ct. new rd
1842	Kelly's post Office London Directory	Bryceson Henry organ builder	5 Tottenham ct. New rd
1842	The Post Office London Directory	Bryceson Henry organ builder	5 Tottenham ct. New rd
1843	Robson's London Commercial Directory 24th edition	Bryceson Hy organ builder	5 Tottenham ct
1843	Kelly's Post Office London Directory 44th Small Edition	Bryceson Henry, organ builder	5 Tottenham ct New rd
1844	Thompson's London Commercial Directory	Brycesecx Hy organ builder	5 Tottenham ct, New rd
1844	Kelly's Post Office London Directory 45th Edition	Bryceson Henry, organ builder	5 Tottenham ct New rd
1845	Kelly's Post Office London Directory	Bryceson Henry organ builder	5 Tottenham ct New rd.
1846	Kelly's Post Office London Directory 47th Edition	Bryceson Henry, organ builder	5 Tottenham ct New rd
1847	Kelly's Post Office London	Bryceson Henry organ builder	5 Tottenham ct, New rd

	Directory 48th Edition		
1847	Kelly's Post Office London Directory 48th Edition (small)	Bryceson Henry organ builder	5 Tottenham ct New rd
1848	Kelly's Post Office London Directory 49th Edition	Bryceson Henry organ builder	5 Tottenham ct New rd
1848	Post Office London Commercial Directory	Bryceson Henry, organ builder	5 Tottenham ct. New ct
1849	Post Office London Directory 50th Edition	Bryceson H, organ builder	5 Tottenham Court, New rd
1850	Kelly's Post Office London Directory	Bryceson Henry, organ builder	5 Tottenham ct. New ct
1860	Kelly's Post office London Directory	Bryceson, Henry & Son	34 Brook street, Euston road, NW
1867	Kelly's Post Office London Directory	Bryceson Bros., factory & steam works, church, chamber, Scudamore & chancel organs	Brook street, Euston road NW
1868	Kelly's Post office London Directory	Bryceson bros. & Co. factory & steam works Church & concert hall organs, Barker's or Bryceson's patent electric organs (Paris Exhibition, prize medal 1867)	4 Stanhope street, Euston road NW,
1900	Kelly's Post Office London Directory	Bryceson Brothers, organ builders, est.1796. Gold Medal International Inventions Exhibition for 'application of electric action to organ mechanisms'	The Hall, Church street, Islington Green, N.
1901	As above		
1902	As above		
1910	Kelly's Post Office London Directory	Bryceson Brothers	155A Marlborough road, Upper Holloway, N
1911	Kelly's Post Office London, Trade and Professional directory	Kirkland Alfred & Bryceson Bros.	155 A Marlborough road, Upper Holloway, N
1913	As above		
1915	As above		
1917	As above		
1918	Kelly's Post Office London Directory	Kirkland, Alfred	155 A Marlborough road, Upper Holloway, N
1919	Kelly's Post Office London Directory	Kirkland, Alfred	155 A Marlborough road, Upper Holloway, N

APPENDIX VIII

LONDON ORGAN BUILDERS, 1800 -1900

None of the London Trade Directories before 1823 classified the trades, so the data for the 1800s and 1810s have been compiled from anecdotal material checked against the *DBOB*. Data for the remaining decades up to 1910 were taken from directory entries under the classification **Organ-Builder.** Entries under this classification indicating that the main or only products were American organs or automated instruments, eg. orchestrions were excluded. Where a few *floruit* dates for a business were found to be earlier and/or later than those given in the *DBOB,* the trade directory dates were used. *Floruit* dates are those for the generic business, not those of the person concerned.

1800s

Name	Floruit	Address	*DBOB* Entry
William Allen	1794-1835	10, Sutton Street, Soho	yes
John Avery	1775-1806	Queen's Square, Westminster	yes
Henry Bevington (firm)	1794-1941	12, Greek Street, Soho	yes
Henry Bryceson (firm)	1796-1917	38, Long Acre	yes
Alexander Buckingham	1791-1857	65. White Lion Street	yes
David Davis	1790-1822	Tottenham Place, Tottenham Court Rd	yes
James Davis	1790-1822	14, Francis Street, Tottenham Court Rd	yes
Joseph Davis	1807-1848	11, Catherine Street, Strand	yes
Thomas Elliot	1803-1832	12, Tottenham Court Road	yes
George Pike England	1791-1815	9, Steven Street, Tottenham Court Rd	yes
Benjamin Flight	1772-1805	9, Old Lisle Street, Leicester Square	yes
Flight & Robson	1806-1832	101, Martyn's Lane	yes
John Gray (firm)	1772-1841	New Road, Marylebone	yes
Green	1772 1806		yes
James Hancock	1774-1813	20, Wych Street	yes
Lincoln (firm)	1790-1848	100, High Holborn	yes
Jonathan Ohrman	1794 1803		yes
John Pistor	1772-1830	21, Swan Street, Minories	yes
Hugh Russell (firm)	1781-1861	28, Theobald's Road	yes

Sources: Holden's Triennial Directory vol. 1, 1805-1806-1807
Kent's London Directory, 1806, *DBOB*

DBOB *Directory of British Organ-Builders* British institute of Organ Studies
www.bios.org.uk

1810s

William Allen	1794-1835	10, Sutton Street, Soho	yes
John Avery	1775-1806	Queen's Square, Westminster	yes
Henry Bevington	1794-1941	12, Greek Street, Soho	yes
Henry Bryceson	1796-1917	38, Long Acre	yes
Alexander Buckingham	1791-1857	65, White Lion Street	yes
David Davis	1790-1822	?	yes
James Davis	1790-1822	14, Francis Street,Tottenham Court Rd	yes
Joseph Davis	1807-1848	11, Catherine Street, Strand	yes
Benjamin Dobson	1807-1830	22, Swan Street,Minories	yes
Joseph Eveleigh	1809-1826	21, Swan Street, Minories	yes
Thomas Elliot	1803-1832	12, Tottenham Court Rd	yes
Benjamin Flight	1772-1805	9, Steven Street, Tottenham Court Road	yes
Flight & Robson	1806-1832	101, St Martyn's Lane	yes
Gray (firm)	1772-1841	New Road, Marylebone	yes
James Hancock	1774-1813	20, Wych Street	yes
John Hicks	1810-1871	31, Clerkenwell Green, EC	yes
Lincoln (firm)	1790-1848	100, High Holborn	yes
A. A. Nicholls	1817-1828	9, Stephen Street, Tottenham Court Road	yes
George Parsons	1809-1841	25, Duke Street,Bloomsbury	yes
John Pistor	1772-1830	21, Swan Street, Minories	yes
Hugh Russell	1781-1861	28, Theobald's Road	yes
William Taylor	1816-1823	High Street, Kensington	yes

Sources: Kent's London Directories
DBOB

1820s

William Allen	1794-1835	10, Sutton Street, Soho	yes
George Aston	c. 1829	?	no
Theodore Charles Bates	1812-1864	6, Ludgate Hill	yes
W.F. Berry	c. 1829	?	no
Henry Bevington	1794-1941	12, Greek Street, Soho	yes
James F. Bishop	1820-present	7, York Buildings, New road	yes
Henry Bryceson	1796-1917	38 Long Acre	yes
Alexander Buckingham	1791-1857	65, White lion Street	yes
George Buckwell	1820-1851	30, Hackney Road	yes
John Bunting	1823-1903	22, Swan Street, Minories	yes
James Butler	1820-1863	4, Hyde Street, Bloomsbury	yes
J. Courcelle	1826-1883	26, Judd Street, Brunswick Square	yes
James Davis	1790-1822	14, Francis Street, Tottenham Court Rd	yes
Joseph Davis	1807-1848	92, Blackfriars Road	yes
Thomas Davis	c.1823	?	no
John Dixon	1826-1835	Conway Street, Fitzroy Square	no
Benjamin Dobson	1807-1830	22, Swan Street , Minories	yes
Thomas Elliot	1803-1832	12, Tottenham Court Road	yes
John Hicks	1810 1871	31, Clerkenwell Green, EC	yes
Elliot & Hill	1825-1833	12, Tottenham Court Road	yes
Joseph Eveleigh	1809-1826	21, Swan Street, Minores	yes
Flight & Robson	1806-1832	101, St Martin's Lane	yes
John Gray (firm)	1772-1841	9 & 11 Quickset Row, New Road	yes
William Haines	1822-1832	18, Bedford Place, Commercial Road	yes
Thomas Hawker	1827-1853	3, Ordnance Road St John's Wood	yes
William Hinton	1826- 1840	Coal Yard, Drury Lane	yes
William Holland	c 1822	39, Lamb's Conduit Street	yes
Edward Kendall	1826-1855	16, Young Street, Kensington	yes
John King	1825-1835	2, Collier Street, Pentonville	yes
Edward John Leathers	c.1826	3, Dean Street, Soho	yes
Henry Cephas Lincoln	1814-1848	100, High Holborn	yes
Longman & Bates	1825-1833	6, Ludgate Hill	yes
Samuel Lucas	1829-1850s	17, Waterloo Road, Lambeth	yes
John Mather	1823-1845	?	yes
Thomas Mayor	1826-1834	Eve Terrace, Pentonville	yes
A. A. W. Nicholls (Nicholls & Co)	1817-1828	9, Stephen Street, Tottenham Court Rd	yes
George Parsons	1809-1841	25, Duke Street, Bloomsbury	yes
William Pilcher	1826-1863	23, Upper Belgrave Place, Pimlico	yes
John Pistor	1772-1830	21, Swan Street, Minories	yes
Hugh Russell	1781-1825	28, Theobald's Road	yes
Timothy Russell	1823-1861	2, Gray's Inn Terrace	yes
Robert Snell	1825-1860	Lower road, Islington	yes
William Taylor	1816-1823	High Street, Kensington	yes
Joseph Walker	1827-present	166, High Holborn	yes
Thomas Richard Willis	1827-1900	?	yes
John Wright	1816-1823	24, Great. Putteney Street, Golden Square	yes

Sources: Pigot and Co's Commercial Directory for 1823-4, published by J. Pigot and Co, 24, Basing Lane, London.
Pigot and Co's London & Provincial New Commercial Directory, published by Pigot and Co., Fountain Street, Manchester.
Pigot and Co's Commercial Directory, Third edition, for 1827-8
Robson's fourth edition, 1829.

1830s

Charles Allen	1838-1871	11, Sutton Street, Soho	yes
William Allen	1794-1835	10, Sutton Street,Soho	yes
William Ayton	1830-1844	16, Summer Street, Eyre at Hill	yes
William Aston	c.1840	5, Homer Place, New Road	yes
Theodore Charles Bates	1812-1864	6 Ludgate Hill	yes
Henry Bevington & Son	1794-1941	12, Greek Street, Soho	yes
James Chapman Bishop	1807-present	1, Lisson Grove South	yes
Edward Boulding	c.1833	10, Whitehart Place, Kennington Lane	yes
Henry Bryceson	1796-1917	5, Tottenham Court, New Road	yes
George & Henry Buckwell	1820-1835	30, Middlesex Place, Hackney Road	yes
John Bunting	1823-1903	22, Swan Street, Minories	yes
James Butler	1820-1863	33, Alfred Street, Bedford Square	yes
John Courcelle	1823- 1881	5, Homer Place, Commercial Road	yes
J. Dawes & Co	c.1848	40, Southampton Row, Bloomsbury &	yes
		28 York Buildings, New Road	yes
John Dixon	1826-1835	13, Chesterfield Street, Marylebone Road	yes
Thomas Joshua Duncan	1835-1889	19, Stockbridge Terrace, Pimlico	yes
Joseph Edbury	1835-1846	67, Seymour Street, Euston Square	yes
Elliott & Hill	1825-1833	12, Tottenham Court, New Road	yes
George Fincham	1835-1863	13, Tottenham Court, New Road	yes
John Fincham	1837-1899	110, Euston Road, NW	yes
Benjamin Flight & Sons	1806-1887	16, King William Street	yes
John Gray (firm)	1772-1841	1, London terrace, New Road	yes
William Haines	1822-1831	18, Bedford Place, Commercial Road	yes
Thomas Hawker	1827-1853	3, Ordnance Road, St. John's Wood	yes
John Hicks	1810-1871	?	yes
William Hill	1832-1916	12, Tottenham Court, New Road	yes
William Hinton	1826-1840	8, Humber Place, Westminster Road	yes
George M. Holdich	1837-1895	12, Greek Street, Soho	yes
John Hull	c.1833	21, Swan Street, Minories	yes
Edward Kendall	1826-1855	16, Young Street, Kensington	yes
John King	1825-1835	2, Collier Street,Pentonville	yes
Longman & Bates	1825-1833	6, Ludgate Hill	yes
Henry Cephas Lincoln	1814-1848	196, High Holborn	yes
Samuel Lucas	1829-1820	17, Waterloo Road	yes
Alexander Mitchell	c.1833	22, Whitehart Place, Kennington Lane	yes
George Parsons	1809-1841	25, Duke Street, Bloomsbury	yes
William Pilcher	1826-1863	19, Stockbridge terrace, Vauxhall Bridge	yes
		Road	yes
William Robjohn	1833 -1857	8, Augustus Square, Regent's Park	yes
Robson & Son	1832-1885	101, St. Martin's Lane	yes
Timothy Russell	1823-1861	2, Gray's Inn Terrace	yes
Robert Snell	1825-1860	Lower Road, Islington	yes
James Thomas	1833-1858	7, Quickset Row, Islington	yes
Joseph Walker	1827-present	166, High Holborn	yes
J. Wheeldon	1835-1861	58, Vauxhall Street,Vauxhall Road	yes
John Westfield	c.1833	19, Waterloo Road, Surrey	yes
Thomas Richard Willis	1827-1900	?	no
Wise & Smith	c.1833	5, Union Street, Lambeth	yes
Herman Wrede	c.1838	36, Minories	no

Sources: Pigot & Co's National London & Provincial Commercial Directory 5th Edition, 1832-34.
Pigot & Co's 6th Edition, 1836.

1840s

Isaac Adams	1840-1844]	26, Old Compton Street. Soho	yes
Charles Allen	1838-1871	11, Sutton Street, Soho	yes
Thomas Ayton	1840-1848	21, Gread Bath Street	yes
William Ayton	1830-1844	10, Summer Street, Hatton Garden	yes
William Aston	c.1840	5, Homer Place, New Road	yes
Theodore Charles Bates	1812-1864	6, Ludgate Hill	yes
Henry Bevington & Son	1794-1941	48, GreekStreet.	yes
James C. Bishop	1807-present	Lissom Grove South	yes
Daniel Brice	1840-1853	8, Brownlow Street, Bury Lane	yes
Richard Brown	1842-1892	5, Borough Road.	yes
H. Bryceson	1796-1917	5, Tottenham Court. New Road	yes
George Buckwell	1820-1851	30, Hackney Road	yes
Alexander Buckingham	1791-1857	5, White Conduit Terrace &	yes
		65 White Lion Street, Pentonville	yes
John Bunting	1828-1903	22 Swan Street, Minories	yes
Joseph Childs	1840-1862	5, Bain's Row, Coldbath Square	yes
T. Congerton	1840-1846	36, Salisbury Street, Lissom Grove	yes
John Courcelle	1823-1881	5, Homer Place, New Road	yes
Joseph Davis	1807-1848	92, Blackfriars Road	yes
J. Dawes & Co	c.1848	40, Southmpton Row, Bloomsbury	yes
James Eagles	1840-1864	4, Hackney Road, Crescent	yes
Joseph Edbury	1835-1846	67, Seymour Street, Euston square	yes
John Fincham	1837-1899	110, Euston Road, NW	yes
B. Flight & Son	1772-1887	16, King William Street, Strand	yes
George Gane	1848-1856	12, Cleveland Street, Fitzroy Square &	yes
		28 York Buildings, New Road	yes
John Gray (firm)	1772-1841	9 & 11, Quickset Row, New Road	yes
Gray & Davison	1841-1950+	9 & 11, Quickset Row, New Road	yes
T. H. Hawker	1847-1853	30, Ordnance Road, St Johns Wood	yes
John Hicks	1810-1871	31, Clerkenwell Green, EC	yes
William Hill	1832-1916	12, Tottenham Court, New Road	yes
George M. Holdich	1837-1895	12, Greek Street, Soho	yes
Richard Holt	c.1841	83 Charlotte Street, Fitzroy Square	yes
Edward Kendall	1826-1855	16, Young Street, Kensington	yes
George King	1848-1879	14A, Bear Yard, Lincoln's Inn Fields	yes
Henry C. Lincoln	1790-1848	100, High Holborn	yes
John Lucas	1847-1873	Eastside Canal Road, Kingsland	no
Stephen Parsons	1835-1844	25, Duke Street, Bloomsbury	yes
W. Pilcher	1826-1863	23, Upper Belgrave place, Pimlico	yes
William H. Prosser	1844-1883	14, New Street, Horseferry Road	yes
William Robjohn	1833-1857	8, Augustus Square, Regent's Park	yes
Joseph Robson & Son	1832-1885	101, St Martin's Lane	yes
Thomas Robson	1844-1876	101, St. Martin's Lane	yes
Timothy Russell	1781-1861	2, Gray's Inn Terrace	yes
James Shield	c.1841	20, Seymour Crescent, Euston sq	no
Thomas Snell	c.1841	5, Union Street, Walcot Place Lambeth	no
John Squire	1837-1891	47, Seymour Street, Euston Square, NW	yes
John Tilly	c.1841	30, Bolton Street, Long Acre	yes
J. Walker	1827-present	27, Francis Street, Tottenham Court Road	yes
Richard Webber	1842-1875	30, Drummond Street, Vauxhall Road	yes
William Westgarth	1846-1871	14, Quickset Row, New Road	yes
J. Wheeldon	1835-1861	58, Vauxhall Street, Vauxhall Road	yes
Thomas Whiteside	1847-1848	40 Upper Baker Street	yes
Mrs Mary Wilkins	1848-1857	5, Wingrove Place, Clerkenwell	yes
Henry Willis	1847-present	Foundling Terrace, Gray's Inn Road	yes
Thomas Richard Willis	1827-1900	?	yes
Solomon Wise	1840-1865	48, Regent Street, Lambeth	yes
Edward Woods	c.1848	51, Stanhope Street, Hampstead Road	yes

Sources: Kelly's Post Office London Directory for 1842, 1843, 1844, 1846, 1847, 1848 & 1849

1850s

Charles Allen	1838-1871	11, Sutton Street, Soho	yes
Theodore Charles Bates	1812-1864	6, Ludgate Hill	yes
Henry Bevington & Son	1794-1941	48, Greek Street	yes
James C. Bishop	1807-present	Lissom Grove South	yes
Daniel Brice	1840-1853	8, Brownlow Street, Bury Lane	yes
Richard Brown	1842-1892	5, Borough Road and Triangle, Kennington Cross	yes
H. Bryceson	1796-1917	5, Tottenham Court New Road	yes
George Buckwell	1820-1851	30< Hackneu Road	yes
Alexander Buckingham	1791-1857	5, White Conduit Terrace & 65 White Lion Street, Pentonville	yes
John Bunting	1828-1903	22, Swan Street, Minories	yes
Joseph Childs	1840-1862	5, Bain's Road, Coldbath Square	yes
John Courcelle	1842-1883	5, Homer Place, New Road	yes
James Eagles	1840-1864	4, Hackney Road, Crescent	yes
John Fincham	1837-1899	110,Euston Road NW	yes
B. Flight & Son	1772-1887	16, King William Sreet, Strand	yes
Robert Forster	1851-1900	51, Broad Street, Lambeth	yes
George Gane	1848-1852	12, Cleveland Street, Fitzroy Square & 28 York Buildings, New Road	yes
August Gern	1866-1938	5, Queen's Buildings, Pancras Street	yes
Gray & Davison	1841-1950+	9 & 11, Quickset Row, New Road	yes
Groves and Mitchell	1849-1851	8, Great Marlborough Street, and 13 Marlborough Row, Golden Square	yes yes
T.H.Hawker	1847-1853	30, Ordnance Road, St. Johns Wood	yes
William Hedgeland	1854-1891	117, Gower Street, WC	yes
John Hicks	1810-1871	31, Clerkenwell Green, EC	yes
William Hill	1832-1916	12, Tottenham Court, New Road	yes
George M. Holdich	1837-1895	12, Greek Street, Soho	yes
Richard Holt	1841-1844	83, Charlotte Street, Fitzroy Square	yes
Frederick Hughes	1859-1885	32, Albany Street,regent's Park	yes
Alfred Hunter	1856-1937	379, Kennington Road, SE	yes
Henry Jones	1853-1895	136, Fulham Road, SW	yes
Thomas Jones	1854-1936	32, Upper Park Place, Dorset Square	yes
Edward Kendall	1826-1855	16, Young Street, Kensington	yes
George William King	1848-1879	3, Park Street, Islington	yes
John Lucas	1844-1873	32A, Shepperton Cottages, New North Rd	yes
Thomas Norton	1849-1874	141, Stanhope Street, Hampstead Road	yes
Stephen Parsons	1835-1844	25, Dukwe Street, Bloomsbury	yes
W.Pilcher	1826-1863	23, Upper Belgrave Place, Pimlico	yes
William H. Prosser	1844-1883	14, New Sreet, Horseferry Road	yes
William Robjohn	1883-1857	8, Augustus Square, Regent's Park	yes
Joseph Robson & Son	1832-1885	101, St. Martin's Lane	yes
Thomas Robson	1841-1876	101, St. Martin's Lane	yes
Timothy Russell	1781-1861	2, Gray's Inn Terrace	yes
Thomas Snell	c.1841	5, Union Street,Walcot Place, Lambeth	no
John Squire	1837-1891	47, Seymour Street, Euston Square	yes
J. Walker	1827-present	27, Francis Street, Tottenham Court Road	yes
Richard Webber	1842-1875	30, Drummond Street, Vauxhall Road	yes
Henry Wedlake	1859- 1902	8, Tolmer's Square, Hampstead Road	yes
William Westgarth	1846-1871	14, Quickset Row, New Road	yes
J. Wheeldon	1835-1861	58, Vauxhall Street, Vauxhall Road	yes
Mrs Mary Wilkins	1845-1857	5, Wingrove Place, Clerkenhall	yes
Solomon Wise	1840-1865	48, Regent Street, Lambeth	yes
Henry Willis	1847-present	18, Manchester Street, Gray's Inn Road	yes
Thomas Richard Willis	1827-1900	29, Minories, E	yes

Sources: Kelly's Post Office London Directory for 1850 etc

1860s

Charles Allen	1838-1871	11, Sutton Street, Soho	yes
William Bate & Co	1866-1919	9, Burdett Road, E	yes
Theodore Charles Bates	1812-1864	6, Ludgate Hill	yes
Henry Bevington & Son	1794-present	48, Greek Street	yes
James C. Bishop	1807-1950+	Lissom Grove South	yes
Richard Brown	1842-1892	5, Borough Road	yes
H. Bryceson	1796-1917	5, Tottenham Court, New Road	yes
John Bunting	1828-1911	22, Swan Street, Minories	yes
Joseph Childs	1840-1862	5, Bain's Row, Coldbath Square	yes
John Courcelle	1842-1883	5, Homer place, New Road	yes
James Eagles	1840-1864	4, Hackney Road, Crescent	yes
John Fincham	1837-1899	110, Euston Road, NW	yes
Thomas Fincham	1864-1900	3, Penton Place, Pentonville Rd, WC	yes
B. Flight & Son	1772-1887	16, King William Street, Strand	yes
Robert Forster	1851-1900	184, Kennington Road, SE	yes
August Gern	1866-1938	5, Queen's Buildings, Pancras Street	yes
Gray & Davison	1841-1950+	9 & 11, Quickset Row, New Road	yes
William Hedgeland	1854-1891	117, Gower Street, WC	yes
John Hicks	1810-1871	31, Clerkenwell Green, EC	yes
William Hill	1832-1916	12, Tottenham Court, New Road	yes
George M. Holdich	1837-1895	12, Greek Street, Soho	yes
Frederick Hughes	1859-1885	32, Albany Street, regent's park	yes
Alfred Hunter	1856-1937	379, Kennington Road, SE	yes
Eustace Ingram	1867-1895	29, Barnard place, Eden Grove, Holloway	yes
Thomas Jennings	1861-1873	199, Hackney Road, E	yes
Henry Jones	1853-1935	136, Fulham Road,SW	yes
Thomas Jones	1854-1936	32, Upper Park Place, Dorset Square	yes
George King	1848-1879	14A, Bear Yard, Lincoln's Inn Fields	yes
John Lucas	1844-187	32A, Shepperton Cottages, New North Road	yes
E. B. Maley	1864-1887	5A, Werrington Street, Oakley Square	yes
Alfred Monk	1862-1926	6, Sussex Terrace, Camden Town	yes
William J. Northcott	1864-1903	Jeffrey's place, Kentish Town	..yes
Thomas Norton	1649-1874	141, Stanhope Street, Hampstead Road	yes
William Pilcher	1826-1863	23, Upper Belgrave Square, Pimlico	yes
William H. Prosser	1844-1883	14, New Street, Horseferry Road	yes
William Robjohn	1833-1857	8, Augustus Square, Regent's Park	yes
Joseph Robson & Son	1832-1885	101, St. Martin's Lane	yes
Thomas Robson	1841-1857-	101, St. Martin's Lane	yes
Timothy Russell	1781-1861	2, Gray's Inn Terrace	yes
Speechly & Ingram	1860-1950+	43, King's Road, St Pancras	yes
John Squire	1837-1891	47, Seymour Street, Euston Square	yes
J. Walker	1827-present	27, Francis Street, Tottenham Court Road	yes
Richard Webber	1841-1875	30, Drummond Street, Vauxhall Road	yes
Henry Wedlake	1859-1902	8, Tolmer's Square, Hampstead Road	yes
William Westgarth	1846-1871	14, Quickset Row, New Road	yes
J. Wheeldon	1835-1861	58, Vauxhall Street, Vauxhall Road	yes
Henry Willis	1847-present	119, Albany Street, Regents Park Road and 67, Rochester Place. Camden Town	yes yes
Thomas Richard Willis	1827-1900	29, Minories,E	yes
Solomon Wise	1840-1865	48, Regent Street, Lambeth	yes

Sources: Kelly's Post Office London Directories

1870s

Charles Allen & Co	1838-1871	114, Euston Road NW	yes
Joseph Ayton	1865-1871	5, Bath Street, London Road SE	yes
William Bate & Co	1866-1919	9, Burdett Road, E, & 610 Mile End Road	yes
William Beales	1872-1918	Limes Road, Croydon	yes
Henry Bevington & Sons	1794-1950+	8, Rose Street, Soho W	yes
Bishop & Starr	1807-present	250, Marylebone Road, NW	yes
Richard Brown	1842-1900	324, Kennington Road, SE	yes
Bryceson Brothers & Co.	1796-1911	4, Stanhope Street,Euston Road, NW	yes
Frederick, William Bunting	1828-1903	22, Swan St. Minories, E	no
John William Corps	1872-1922	117, Great College Strett, NW	yes
Charles Danbney,	c.1870	5, Little Saffron Hill, EC	no
John Fincham	1837-1899	59, Milton Street, Dorset Sq. NW	yes
Thomas Fincham,	1864-1900	110, Euston Road, NW	yes
Flight, Benjamin & Son	1772-1887	3, Penton Place, Pentonville Rd, WC	yes
Robert Forster,	1851-1900	36, St. Martin's Lane, WC	yes
L. Garioli, & Co.	c.1870	184,Kennington Road, SE	no
August Gern,	1866-1938	5, Little Saffron Hill, EC	yes
		5, Queen's Buildings, Pancras Street,	yes
Gray & Davison	1841-1950+	Tottenham Court Road W	yes
James Graver	c.1870	370, Euston Road, NW	no
William George Haywood	1871-1917	157, Kingsland Road, E	yes
William Hedgeland,	1854-1891	179, Drummond Street, NW	yes
John Hicks,	1810-1871	117, Gower Street, WC	yes
William Hill, & Son	1832-1916	31, Clerkenwell Green, EC	yes
George Maydwell Holdich,	1837-1895	261, Euston Road, NW	yes
Frederick Hughes	1859-1885	361 Liverpool Road, N	yes
Alfred Hunter	1856-1937	32, Albany St. Regent's Park. NW	yes
Thomas Jennings,	1861-1873	379, Kennington Road, SE	yes
Henry Jones	1853-1935	199, Hackney Road, E	yes
Thomas Jones,	1854-1936	136, Fulham Road, SW	yes
George William King	1848-1879	32, Upper Park Place, Dorset Sq. NW	yes
Alfred Kirkland	1874-1923	3, Park Street, Islington, N	yes
John Lucas	1844-1873	5A, Northampton Place, Holloway Road	yes
		32A, Shepperton Cottages,	yes
E .B. Maley	1864-1887	New North Road, N	yes
Alfred Monk	1862-1926	5A, Werrington St. Oakley Sq. NW.	yes
William J. Northcott	1864-1903	6, Sussex terrace, Camden town	yes
Thomas Norton	1849-1874	Jeffrey's Place, Kentish Town, NW	yes
William H Prosser	1844-1883	141, Stanhope St. Hampstead Rd, NW	yes
Thomas J.F. Robson	1832-1885	14, New Street, Vincent Sq, SW	yes
Speechly & Ingram	1860-1950+	101, St. Martin's Lane, WC	yes
John Squire	1837-1891	43, Kings Road. St. Pancras, NW	yes
James Taylor,Sr	1878-189?	47, Seymour St. Euston Sq. NW	yes
J. W. Walker	1827-present	9A, Georgiana Street, Camden Town, NW	yes
Henry Wedlake	1859-1902	27, Francis St. Tottenham Ct. Rd. WC	yes
		8, Tolmer's Square, Hampstead Road,	yes
		NW & 5, Brook's Place, Munster square,	yes
Henry Willis	1847-present	67, Rochester place, Camden Town, NW	yes
Thomas Richard Willis	1827-1900	29, Minories, E	yes

Sources: Kelly's Post office London Directories

1880s

William Bate & Co	1866-1919	9, Burdett road, E & 610, Mile End Road	yes
William Beales	1872-1918	Limes Road, Croydon	yes
Bevington & Sons	1794-1950+	8, Rose Street, Soho, W	yes
Bishop & Son	1807-present	250, Marylebone Road, NW	yes
Richard Brown & Son	1842-1900	324, Kennington Road, SE	yes
Bryceson Brothers	1796-1917	Charlton Works, 10, Charlton Place	yes
Bunting	1828-1903		
		Islington Green, N	yes
John William Corps	1872-1922	117, Great College Street, NWN	yes
Thomas Fincham	1864-1900	36, St. Martin's Lane WC	yes
Benjamin Flight & Son	1772-1887	184, Kenning Road, SE	yes
Robert Forster	1851-1900	11,12 & 13 Gilbert Street, Bloomsbury,	yes
Tom Gale	1884-1886	WC	yes
August Gern	1866-1938	Boundary Road, Notting Hill W	yes
Robert Gildersleeve	1883-1925	Egbert Street, St. George's Road NW	yes
Gray & Davison Ltd	1841-1950+	370, Euston Road NW	yes
William George Haywood	1871-1917	179, Drummond Street. NW	yes
William Hill & Son	1832-1911	372, York Road, NW	yes
George Maydwell Holdich	1837-1895	361, Liverpool Road N	yes
Frederick Hughes	1856-1937	32, Albany Street, Regent's par,k NW	yes
Alfred Hunter & Son	1859-1885	65A, high Street, Clapham	yes
Eustace Ingram & Son	1867-1895	29, Barnard Place, Eden Grove, Holloway	yes
Henry Jones & Son	1854-1934	136, Fulham Road, SW	yes
Pilcher Jones	1880-1885	27A, Lower William Street, Portland Town	yes
Thomas Sidwell Jones	1854-1936	25, Pentonville Road	yes
Alfred Kirkland	1874-1923	5A, Northampton Place, Holloway Road	yes
Edward Leach	1884-1887	348, Kentish Town Road, NW	yes
Lewis & Co. Ltd	1860-1913	Shepherd's Lane, Brixton, SW	yes
Maley, Young & Oldknow	1864-1879	King's Road, NW	yes
Alfred Monk	1862-1926	6, Sussex Terrace, Camden Town, NW &	yes
		Rochester Place, Camden Town, NW	yes
William J. Northcott	1864-1903	Jeffrey's Place, Kentish Town, NW	yes
William Samuel	1882-1907	62, Montague Road, Darlston, NW	yes
Frederick Alfred Slater	1887-1925	Rosebank Road, Bow, E	yes
Henry Speechly	1860-1950+	43, King's Road, St. Pancras, NW	yes
James George Taylor	1878-189?	9A, Georgiana Street. Camden Town, NW	yes
George Joseph Wainwright	1880-1885	100, Jamaica Road, SE	yes
J. W. Walker & Sons	1827-present	27, Francis Street, Tottenham Court Road	yes
Christopher Henry Walker	1884-1917	25, Manchester Street, and New Cross	yes
		Road	yes
Henry Thomas Wedlake	1859-1902	8, Berkeley Road, Regent's Park Road	yes
Henry Willis & Sons	1847-present	Rochester place, Camden Town, NW	yes
Thomas Richard Willis	1827-1900	29, Minories, E	yes
Edward O. Yorston	1888-1915	81A, Vauxhall Walk, SE	no

Source: Kelly's Post Office London Directories

1890s

John Arrigoni & Co	1891-1916	150 & 158, Great College Street, NW	yes
Baker& Co	1893-1907	Eckington Place, NW	yes
William Bate & Co	1866-1919	9, Burdett Road , E & 610, Mile End Road	yes
Beale & Thynne	1893-1902	Addison Works, Woodstock Road, Shepherds Bush	yes
William Beales	1872-1918	Limes Road , Croydon	yes
Bevington & Sons	1794-1950+	8, Rose Street, Soho	yes
Bishop & Son	1807-present	250, Marylebone Road, NW	yes
Ricardo Brown & Son	1842-1900	324, Kennington Road, SE	yes
Bryceson Brothers	1796-1917	54, Essex Road,N	yes
Bunting	1828-1903		yes
John William Corps	1872-1922	117, Great College Street,NW	yes
Henry Fincham	1864-1900	150, Euston Road, N	yes
Thomas Fincham	1881-1893	115, Pentonville Road, N	yes
Robert Forster	1851-1900	184, Kennington Road, SE	yes
August Gern	1866-1938	Boundary Road, Notting Hill	yes
Robert Gildersleeve	1841-1950+	370, Egbert Street, St George's Road,NW	yes
Gray & Davison	1883-1925	6, Pratt Street & 75, Bayham Street, NW	yes
William George Haywood	1878-1917	179, Drummond Street, NW	yes
Alfred Hays	1898-1924	4, Royal Exchange Buildings, EC	yes
William Hill & Son	1832-1916	372, York Road, Camden	yes
Frederick Hughes	1856-1937	32, Albany Street, Regent's Park	yes
Alfred Hunter & Son	1856-1937	65A, High Street, Clapham	yes
Eustace Ingram	1867-1935	361,Liverpool Road, N	yes
Henry Jones & Son	1853-1934	70, Park Road, Chelsea	yes
Thomas Jones	1874-1923	25, Pentonville Road	yes
Alfred Kirkland	1854-1923	655, Holloway Road, N	yes
Lewis & Co Ltd	1860-1913	234, Ferndale Road, Brixton, SW	yes
John Marini	1899-1905	28, West Street, Mile End Road	yes
Alfred Monk	1862-1926	550, Holloway Road	yes
John G. Murdoch & Co Ltd	1890-1939	91 & 93 Farringdon Road	yes
Norman & Beard	1887-1916	19, Ferdinand Street, Chalk Farm, NW	yes
			yes
Henry Potter	1897-1917	27, Murray Mews, Camden Square, NW	yes
Positive Organ Co. Ltd	1887-1916 1898-1941	17, Harewood Place, Hanover Square, & Mornington Works, Nelson street, NW	yes
William Samuel	1882-1907	62, montague Road, Darlston	
Frederick Alfred Slater	1887-1925	Rosebank Road, Bow, E	yes
George Augustus Speechly	1887-1925	34, St James's Road, N	yes
Christopher Henry Walker	1884-1917	25, Manchester Street,& New Cross Road	yes
Joseph William Walker & Sons	1827-present	27, Francis Street, WC	yes
Henry Thomas Wedlake	1859-1902	8, Berkley Road	yes
Henry Willis & Sons	1847-present	67, Rochdale Place, Camden Town, NW	yes
Thomas Richard Willis	1827-1900	1, Aldgate Avenue, E	yes
Edward O. Yorston	1888-1915	81A, Vauxhall Walk, SE	yes

Source: Kelly's Post Office London: Trades and Commercial, 96th Edition

1900s

Baker & Co	1893-1907	80, New Cross Road, SE	yes
William Bate & Co	1866-1919	9, Burdell Road, SE, and 610, Mile End Road	yes
William Beales	1872-1918	Limes Road, Croydon	yes
Bevington & Sons	1794-1950+	11, Manette Road, Soho	yes
Bishop & Son	1807-1950+	20, Upper Gloucester Road	yes
Brindley & Foster	1870 1939	Alliance House, Adam Street, Strand	yes
Bryceson Brothers	1796-1917	The Hall, Church Street, Islington Green	yes
Bunting	1828-1903		
John William Corps	1872-1922	117, Great College Street	yes
Chute & Withall	1904-1909	8,Sancroft Street, Kennington Road	yes
Farrant Organ Co	c.1905	4A, Great Marlborough Street	no
August Gern	1866-1938	3, Boundary Road, Notting Hill	yes
Gray & Davison	1841-1950+	6, Pratt Street	yes
Alfred Hays	1898-1924	4, Royal Exchange Buildings, EC	yes
Hayward Brothers	1878-1917	179, Drummond Street, NW	yes
William Hill & Son	1832-1916	372, York Road, N	yes
Alfred Hunter & Son	1856-1937	65A, High Street, Clapham, SW	yes
Eustace Ingram	1867-1895	6, Pratt Street	yes
Henry Jones & Son	1853-1934	70, Park Works, Chelsea	yes
Thomas Jones	1854-1934		
W.W. Kimball Co	c.1905	153, Farringdon Road, EC	no
Alfred Kirkland	1874-1923	113, Cottenham Road, NW	yes
Lewis & Co	1860-1913	234, Ferndale Road, Brixton, SW	yes
John Marini	1899-1905	28, West Street, Mile End Road	yes
Alfred Monk	1862-1926		yes
John G. Murdoch & Co Ltd	1890-1939	91 & 93 Farringdon Road	yes
William Noble & Sons	1901-1910	119, Holland Park Avenue, W	yes
Norman & Beard Ltd	1887-1916	19, Ferdinand Street, Chalk Farm, NW	yes
William J. Northcott	1864-1903		
Positive Organ Co Ltd	1898-1941	17, Harewood Place, Hanover Square & Mornington Works, Nelson Street, Arlington Road, NW	yes
Henry Potter	1897-1917	27, Murray Mews, Camden Square, NW	yes
William Samuel	1882-1907	62, Montague Road, Darlston, NW	yes
Frederick Alfred Slater	1887-1925	3, Rosebank Road, Bow, SE	yes
Henry Speechly & Son	1860-1950+	St Mark's Road, Dalston	yes
Charles Corry Vizer	c. 1905	14, Eckington Gardens, New Cross Road, SE	no
Christopher Henry Walker	1884-1917	25, Manchester Street, & New Cross Road, SE	yes
Joseph William Walker	1827-1950+	27, Francis Street, Tottenham Court Road	yes
Henry Wedlake	1859-1902		yes
Henry Willis & Son	1847-present	67, Rochester Place, Camden Town	yes
Edward O. Yorston	1888-1915	81A, Vauxhall Walk, SE	yes

Sources: Post office London Directory for 1905

APPENDIX IX

Provisional Bryceson opus list

The National Pipe Organ Register (NPOR), at present run by the Cambridge University Computer Centre, is the main source for this provisional list. No differentiation is made between original Bryceson instruments and those of other builders that have undergone Bryceson reconstructions or substantive extensions. Because of historic developments over the years, many buildings have had more than one organ survey. In these cases, the reference number of the survey that first mentions a Bryceson connection is listed. The name of the Bryceson firm is that given in the survey and it is clear that 'Bryceson' is frequently used as an abbreviation for the full name of the firm at the time of the work. This is not helpful in confirming dates of build or reconstruction. Some times a Bryceson firm name is used which does not match the given date. For example, an instrument with a definitive build date in the early 1860s will have been built by 'Bryceson and Sons', but is listed in the survey as being built by 'Bryceson Bros & Ellis', a name which did not come into existence until 1878. In these cases we may assume that the later name is that of the Bryceson firm that was responsible for the provision of on-going tuning and maintenance services.

Although 296 surveys are listed for Bryceson and its variants in the NPOR as at 17 June 2004, the count includes buildings where there is more than one survey (perhaps two or three). In these cases I have counted only the first survey. This reduces the number of buildings by 38 to 258.

There are also a few cases where an organ has been transferred at some time to one or more other buildings. An example is the N. J. Holmes chamber organ of 1875 that was later moved to the Abbey Church of St. Benedict at Fort Augustus and then to St. Peter, Grampian, Buckie, so there are three NPOR surveys containing a reference to Bryceson. There are other cases where a survey says 'organ moved elsewhere'. Again, there may be a double but unidentified counting. We must therefore assume that the actual number of Bryceson organs in the provisional opus

list is overstated by at least ten percent. We should also note that only 150 instruments have a construction date. I attribute most of the 108 undated Instruments to the first sixty years of the century. Where an instrument is undated though given a full name in the survey – and bearing in mind my comment in the previous paragraph, it has sometimes been possible to attribute an approximate build date based on the following Bryceson name periods:

1796-1855	Henry Bryceson
1856-1859	H. Bryceson & Son
1859-1865	Henry Bryceson & Son
1865-1873	Bryceson Bros
1873-1877	Bryceson Bros & Morten
1878-1881	Bryceson Bros & Ellis
1882-1911	Bryceson Bros
1911-1917	Kirkland & Bryceson Bros

The information on organs that have not been identified with a build date is given in a subsidiary list. Apart from the NPOR source, other referenced literature sources provide a further 28 named and dated instruments that are included in the main list.

To what extent is the NPOR complete? How many organs did the firm build in its long life? We have earlier suggested (page 189) that the NPOR underestimates a builder's output by an average of 49%.

Builder	**Overall output**	**NPOR summary**	**% Understated**
Willis[378]	2300 (1847- pres.)	1317	+ 43
Forster & Andrews[376]	>1358 (1843 -1956)	839	+ 38
Walker[377]	6000 (1827- pres.)	2091	+ 65
		Average	+ 49

376. Elvin, Lawrence, *Forster and Andrews, Organ Builders* (Elvin, 1968)

377. Wilson, David, (J. W. Walker & Son Ltd), private communication, 21 October 2004378.

378. Wyld, David, (Henry Willis & Sons Ltd), private communication, 21 October 2004

The high understatement by the NPOR is due to its exclusion of overseas contracts, for which Walker held a pre-eminent position amongst British organ-builders during the late nineteenth century, with very substantial exports to our Empire. I am taking as a more realistic understatement factor, the average of the Willis and Forster & Andrews data, i.e. 40%, yielding an estimated total of 493 organs for Bryceson's production of organs at home:

Builder	Overall output	NPOR summary	% Understated
Bryceson	493 (1796 -1917)	296	40

Exports

As with the leading London organ-builders, the firm exported instruments to the Empire and the Americas. The following places have so far been identified:

South America	Buenos Ayres	1864
Hong Kong		1859
Japan		1880
New Zealand	Alkaroa	1869

But there must have been several more, perhaps as many as 50, including many barrel organs during the early part of the century.

List of dated organs

Year	Name	Building	Place	County	NPOR Survey
1805	Bryceson				Ref 1
1810	H. Bryceson	King Charles the Martyr	Shelland	Suffolk	A00263
1816	Bryceson	St Peter & St Paul	Belton	Lincs	N14464
1816	Bryceson	Castle Museum	York	Yorks	N13253
1820-35	H. Bryceson	Wistow Hall	Wistow	Leics	D00835
1826	H. Bryceson	St Andrew	Lyddington	Leics	N04472
1828	Henry Bryceson	St Ann's Chapel	Wedmore		Ref 2
1830	Bryceson	St Lawrence	Alton	Hants	Ref 3
1834	M. Bryceson	St Peter	West Titherley		Ref 4
1835	Henry Bryceson	Baptist Church	Langham	Leics	N04470
1837	Bryceson Bros & Ellis	All Saints	Odiham	Hants	N08088
1840 c.	H. Bryceson	St George	Edington	Somerset	A00970
1840 c.	Bryceson	Methodist Church	Grantham	Lincs	D03890
1840-50	Henry Bryceson & Son	St Mary	Swinstead	Lincs	D03667
1845 c.	Bryceson	All Saints	Thornham	Norfolk	N06705
1845 c.	Henry Bryceson	Glebe House	Hunstanton	Norfolk	N06383
1849	Henry Bryceson (or Flight)	St Mary the Virgin	Avington	Hants	Ref 5
1850 c.	Bryceson & Ellis	St Andrew	Althorne	Essex	N08656
1850 c.	Henry Bryceson	St Peter & St Paul	Langton by Partney	Lincs	D03950
1850 c.	H. Bryceson	St Peter	Lutton	Northants	D04662
1850 c.	Bryceson	St Peter	Broughton Poggs	Oxon	H00291
1850 c.	Bryceson	Holy Trinity	Bracknell	Berks	D02435
1851	Henry Bryceson	All Saints	Earsham	Norfolk	N01729

1852 c.	Bryceson	Private Residence	Glasgow	Strathclyde	A00763
1852	H. Bryceson	All Saints	Helhoughton	Norfolk	N12904
1853	Henry Bryceson	Briningham House	Briningham	Norfolk	D03192
1853	Henry Bryceson	St Maurice	Briningham	Norfolk	N06161
1855 c.	Henry Bryceson & Son	Baptist Church	Margate	Kent	D03097
1855	Henry Bryceson	St Mary	Luxborough	Somerset	N12190
1859	Bryceson	St Mary	Banbury	Oxon	D08080
1859	Bryceson Bros	St Mary	Woodlands	Kent	H00526
1860 s	Bryceson (& Fincham)	St Mary the Virgin	Godmanchester	Cambs	A00891
1860 c.	Bryceson & Co	St Mary Magdalene	Waltham on the Wolds		N04589
1860 s	Bryceson	St Clement	Cambridge	Cambs	D02720
1860 c.	Bryceson Bros	St Mary the Virgin	Ashley	Northhants	D02701
1860 c.	Bryceson & Co	St Peter	Stonesby	Leics	D05824
1860	Bryceson	St Nicholas	Blakeney	Norfolk	N06151
1864	Bryceson	St John	Buenos Ayres	Argentina	Ref 6
1864	Bryceson	St Michael	Thorpe-le-Soken	Essex	N08748
1864	Bryceson	All Saints with St John	Huntingdon	Cambs	N03123
1864	Bryceson	St Helen	Ipswich	Suffolk	J00008
1865	Bryceson Bros	St James	Trowbridge	Wilts	D01847
1866	Bryceson Bros	Hartley Institution	Southampton	Hants	Ref 7
1866 c.	Bryceson Bros	St Bartholomew	Great Stukeley	Cambs	D00208
1866 c.	Bryceson Bros	St Michael	Bedwyn	Wilts	E00037
1866	Bryceson	St Dunstan in the East		City of London	N17686
1867	Bryceson Bros &Co	*Éxposition Universelle*	Paris	France	Ref 8
1867	Bryceson & Co	St Mary	Reepham	Norfolk	A00110

1867	Bryceson	St John's Hall (Town Hall)	Penzance	Cornwall	N11241
1867	Bryceson	United Reformed Church	Christchurch	Dorset	T00518
1867	H. Bryceson	St Matthew and St Wardrede	Lee	Devon	B00106
1867	Bryceson Bros & Ellis	Holy Trinity	Walton on Thames	Surrey	N13839
1867	Bryceson & Co	Great concert Hall	Brighton	Sussex	Ref 9
1868	Bryceson	Theatre Royal (electric action)	Strand	Greater London	N15855
1868	Bryceson Bros & Ellis	Parish Church	Ashley	Northants	Ref 10
1868	Messrs Bryceson	St John, cathedral	Hong Kong		Ref 11
1868	Messrs Bryceson & Co	Agricultural Hall	London		Ref 12
1868	Bryceson	St Michael (electric action)	Cornhill	City of London	N17708
1868	Bryceson	St Paul	Harrow	Greater London	D02471
1868	Bryceson	St Luke	Soho	Greater London	N17365
1868	Bryceson	St George	Dunster	Somerset	N05562
1868	Bryceson Bros	St Mary	Denton	Norfolk	N06215
1869	Bryceson	St Mary & St Gabriel	Binbrook	Lincs	D03729
1869	Bryceson Bros	St Augustine (electric action)	Highbury	Greater London	Ref 13
1869	Bryceson Bros	Christchurch (electric action)	Camberwell	Greater London	Ref 14
1870 c.	Bryceson	St John the Baptist	Cookham Dean	Berks	C00780
1870	Bryceson	Our Lady of Victories	Kensington	Greater London	N17491
1870	Bryceson Bros	Independent Chapel	Welwyn	Herts	D00702
1871	Bryceson	St Mary	Walsham le Willows	Suffolk	D00248
1871	Bryceson	St Andrew, Cathedral	Aberdeen	Grampian	A00492
1871	Bryceson Bros	St George (electric action)	Tufnell Park	Greater London	N16881
1871	Bryceson & Co	Parish Church	Addlestone	Surrey	Ref 15
1871	Bryceson	St Jean de la Savoie	Bloomsbury	Greater London	N16487

1872	Bryceson	St Luke	Canning Town	Greater London	N16739
1872	Bryceson	Parish Church	Old Radnor		Ref 16
1872	Bryceson Bros	St Dunstan and All Saints	Stepney	Greater London	N16575
1872	Bryceson & Co	Franciscan Friars	Peckham	Greater London	T00752
1872	Bryceson	St Botolph	Aldersgate	City of London	N17555
1872	Bryceson & Co	St John the Evangelist	Colmere	Shrops	D05435
1872	Bryceson Bros	Rugby School Chapel (electric action)	Rugby	Warks	N07554
1872	Bryceson Bros & Co	Royal Italian Opera House	London		Ref 17
1873	Bryceson	Methodist School Hall	New Barnet	Greater London	N14544
1873 c.	Bryceson & Co	Mr Holmes Residence	Regent's Park	Greater London	D07680
1873	Bryceson	Methodist Church	New Barnet	Greater London	D00606
1873	Bryceson Bros & Morten	Parish Church	Keysoe		Ref 18
1873 c.	Bryceson Bros	St John	Stockcross	Berks	D05533
1874	Bryceson Bros	St Nicholas	Wickham	Hants	N12704
1875 c.	Bryceson Bros & Ellis	Holy Trinity	St Austell	Cornwall	N02218
1875	Bryceson Bros & Ellis	St Augustine	Alston	Cumbria	N01522
1875	Bryceson [Bros & Morten]	St Matthew	Yiewsley	Greater London	N15917
1875	Bryceson & Morten	St Mary Magdalene	Fleet	Lincs	D03863
1875	Bryceson Bros & Ellis	St Mary the Virgin	Steeple Ashton	Wilts	N10351
1875	Bryceson Bros	Nathaniel Holmes Residence (electric action-Echo division)	Regent's Park	Greater London	N17066
1875	Bryceson Bros	St George	Leicester	Leics	Ref 19
1876	Bryceson	St Paul	Rusthall	Kent	H00473
1876	Bryceson Bros & Morten	St Peter & St Paul	Algarkirk	Lincs	A01010
1876	Bryceson Bros & Morten	Tabley House Chapel	Knutsford	Cheshire	D04194
1876	Bryceson Brothers	St Michael and All Angels	Brownsover	Warks	N00965

1876 c.	Bryceson & Ellis	St Andrew	Walcot	Avon	D05802
1876	Henry Bryceson	St Lawrence	Sedgebrook	Lincs	N14353
1876	Bryceson Bros & Morten	SS. Peter and Paul	Cork	Eire	Ref 21
1877	Bryceson Bros & Ellis	St Columba	St Columb Major	Cornwall	N11262
1878 c.	Bryceson Bros & Morten	St Illogan	Illogan	Cornwall	D07592
1878	Bryceson & Co	St Pancras New Church	St Pancras	Greater London	N12179
1878	Bryceson Bros & Ellis	St Matthew the Evangelist	Rugby	Warks	K00100
1878	Bryceson Bros & Ellis	All Saints	Brightlingsea	Essex	N08682
1878	Bryceson Bros	All Saints	Gimingham	Norfolk	D01857
1878	Bryceson	Cathedral	Norwich	Norfolk	N06482
1879	Bryceson	Holy Trinity	Newton St Loe	Avon	A00066
1879	Bryceson	St Paul	The Borough	Greater London	N16087
1879	Bryceson	St George	Gooderstone	Norfolk	E00269
1879	Bryceson Bros & Ellis	Holy Trinity (electric action)	Dover	Kent	N14596
1879	Byrceson	St Margaret	Lothbury	City of London	N17642
1879	Bryceson	St Dunstan with St Thomas	East Acton	Greater London	D02538
1880 c.	Bryceson Bros & Ellis			Japan	Ref 22
1880 c.	Bryceson Bros	Assumption of St Mary	Stowe Park	Bucks	D01936
1880 c.	Bryceson Bros & Ellis	St Michael and All Angels	Stokenham	Devon	N12544
1880 c.	Bryceson Bros & Ellis	St Leonard	Sandridge	Herts	N14146
1880	Bryceson Bros & Ellis	St Andrew's Hall	Norwich	Norfolk	A00062
1880	Bryceson Bros & Ellis	St Andrew	Fort William	Highland	N01555
1880 c.	Bryceson Bros	St Mary	Mayfair	Greater London	N17369
1880 c.	Byceson bros & Ellis	St Mary Magdalene	Woodborough	Wilts	A01172
1880	Bryceson Bros & Ellis	Baptist Church	Ealing	Greater London	D08260

1880 c.	Bryceson Bros & Ellis	St Mary the Virgin	Marlborough	Wilts	N08614
1880	Bryceson Bros & Ellis	St Nicholas	Longparish	Hants	T00442
1880 s.	Bryceson	St Mark	Darlington	Durham	N12167
1880 c.	Bryceson Bros & Ellis	Methodist Church	St Columb Major	Cornwall	D07630
1880 (?)	Bryceson	St Mary the Virgin	Burpham	Sussex	N00391
1881	Bryceson	St Peter	Pietermaritzburg	South Africa	Ref 23
1881	Bryceson Bros & Ellis	St Andrew	Holt	Norfolk	D01855
1881	Bryceson Bros & Ellis	St Alban the Martyr	Birmingham	West Midlands	N07305
1882	Bryceson Bros & Ellis	St John the Evangelist	Jedburgh	Borders	D08078
1882	Bryceson Bros & Ellis	Town Hall	High Wycombe	Bucks	N09663
1882	Bryceson Bros & Ellis	St Matthew	Canonbury	Greater London	N16818
1882	Bryceson	St James Hall	Piccadilly	London	Ref 24
1882	Bryceson Ellis & Co	Town Hall	Paisley	Strathclyde	N18193
1883	Messrs Bryceson	Presbyterian Church	Islington	London	Ref 25
1883	Bryceson Bros & Ellis	All Saints	Friern Barnet	Greater London	N16048
1883	Bryceson Bros	All Saints	Harston	Cambs	N13203
1883	Bryceson Bros c.	St Mary the Virgin	South Baddesley	Hants	Ref 26
1884	Bryceson Bros & Ellis	St Andrew	Caxton	Cambs	N03025
1884	Bryceson Bros	St Peter	Hammersmith	Greater London	N01915
1884	Bryceson Bros	St Nicholas	Chiswick	Greater London	N17462
1884	Bryceson Bros	Parish Church	Aberfoyle	Central	D04664
1885	Bryceson Bros	St Peter (electric action)	Parkstone	Dorset	N09999
1885	Bryceson Bros	St James	Hemingford Grey	Cambs	N03102
1886	Bryceson Bros	Holy Trinity	Habergham Eaves	Lancs	N01556
1886	Bryceson Bros	St Peter ad Vincula	Broad Hinton	Wilts	N08235

1887	Bryceson Bros	Methodist Church	Helston	Cornwall	N11187
1887	Bryceson	St Machreth	Llanfachraeth	Gwynedd	D02782
1887	Bryceson	St Editha	Tamworth	Staffs	N05017
1888	Bryceson Bros	Holy Trinity	Raithby	Lincs	D00192
1889	Bryceson Bros Ltd	St Saviour	Dartmouth	Devon	N10561
1890 s.	Bryceson Bros	St Gabriel	Walthamstowe	Greater London	D05323
1890 c.	Bryceson Bros	St Alban and St Stephen	St Albans Herts	D00678	
1890	Bryceson Bros	Rugby School Hall	Rugby	Warks	N01517
1893	Bryceson	Graylingwell Hospital	Chichester	Sussex	E00700
1895	Bryceson	Royal Arsenal Church	Woolwich	Greater London	N16201
1895	Bryceson Bros Ltd	Holmwood House	Dorking	Surrey	D05456
1897	Bryceson Bros	Methodist Church	Tilehurst	Berks	N09869
1897	Bryceson	St Mary the Virgin	Woolpit	Suffolk	D00248
1899	Bryceson	St Edmund the King	Kingsbridge	Devon	N10482
1899	Bryceson Bros Ltd	St Andrew	Chale	Isle of Wight	H00231
1900 c.	Bryceson	St Michael and All Angels	Bedford Park	London	Ref 27
1901	Bryceson Bros & Ellis	United Reformed Church	Soham	Cambs	D03962
?	Bryceson Bros Ltd	St John the Baptist	Newport	Isle of Wight	N09715
1902	Bryceson & Ellis	St Peter	Becontree	Greater London	N08759
1906	Bryceson Bros	St Michael	Edenham	Lincs	D03822
1906	Bryceson	St John the Baptist	Capel	Surrey	N13421
1908	Bryceson	Baptist Church	Cricklewood	Greater London	N13495
1913	Kirkland & Bryceson	All Saints	Melbourn	Cambs	N12242
1913	Kirkland & Bryceson	Holy Trinity	Eccleshall	Staffs	N04910
1920 c.	Bryceson Bros	St Mary the Virgin	Little Wymondley	Herts	D05152

References

1. Clutton, Cecil and Niland, Austin, *The British Organ* (London: B.T.Batsford Ltd, 1963), p.238
2. 'Wedmore Chronicle' http:/www.tutton.org/wedchr14.html p. 6
3. :/home.clara.net/willman/ http p. 1
4. 'St Peter West Thytherley' http://freepages.genealogy.rootsweb.com/~villages/wtythchu.htm
5. 'The history of St Mary the Virgin Avington
   http://freepages.genealogy.rootsweb.com/~villages/avingchu.htm
6. Editorial, *The Musical Standard*
7. Editorial, *The Musical Standard* 114 (6 October 1866), p.211
8. Editorial, *The Musical Standard* 143 (27 April 1867), p. 262
9. 'Inauguration of the New Concert Hall' *The Brighton Herald* (7 December 1867), p. 1
   'The Great Fire in Brighton' *Brighton Gazette* (12 October 1882), p. 2
   'Jimmy's Cards' – Concert Hall held by the Brighton Central Library
10. Davidson, Hilary, *Choirs, Bands and Organs* (Oxford: Positif Press, 2003), p. 66
11. Editorial, *The Musical Standard* 194 (18 April 1868), p. 163
12. Editorial, *The Musical Times* 21(26 September 1868), p. 119
13. Bryceson, Henry, 'Description of the Electric Organ' *J. Soc. Arts* 840 (25 December 1868), p. 88
14. Hopkin & Rimbault, *The organ, its History and Construction* (London: 1877), p. 87
15. *JBIOS* XI, 1987
16. Sutton, Frederick Heathcote, *Church Organs* (Oxford: Positif Press, 1988), p.17
17. 'Table Talk' *The Musical Times* 397 (9 March 1872), p. 122
19. Tindall, Paul, 'Research Notes' *BIOS Reporter* 2 (April 2002)
20. Davidson, Hilary, *Choirs, Bands and Organs* (Oxford: Positif Press, 2003), p.83
21. Shepherd, Eric P., private communication, 20 June 2002
    Publicity leaflet, Bryceson Bros & Morten, Bryceson File, BOA
22. http://www.jca.apc.org/~maki_org-99hg.htm
23. Smit, David private communication, 15 April 2002
    Van der Spuy, 'die Musieklewe van Pietermaritzburg, 1850-1902' D.Phil thesis, University of Stellenbosch, 1975
24. Bryceson File, BOA
25. Editorial, *musical Opinion* 266 (1899), p. 115
26. Hartwell, E. J., 'The Story of St. Mary's Church South Baddesley'
    http://www.malcolm.riches.ukgateway.net/SouthB.html
27. Buchanan, Bruce, Bryceson File, BOA

List of undated organs

Name	Building	Place	County	NPOR Survey	Date (est)
Bryceson	St John the Baptist	Bathwick	Avon	NO5923	
Bryceson	Holy Trinity	Burrington	Avon	NO8226	
Bryceson Bros & Morten	St John	Charfield	Avon	NO5680	
Bryceson (?)	St Peter and St Paul	Cranfield	Beds	N13184	
Bryceson Bros & Morten	St Mary the Virgin	Keysoe	Beds	C00932	
Bryceson (?)	St Lawrence	Wymington	Beds	D00174	
Henry Bryceson & Son	St James the Great	Eastbury	Beds	N09928	
Bryceson Bros & Morten	St Botolph	Bradenham	Bucks	N09231	
Bryceson Bros & Morten	St Peter and St Paul	Ellesborough	Bucks	D02475	
Bryceson Bros	St Mary the Virgin	Ludgeshall	Bucks	N09599	
Henry Bryceson	St Andrew	Chesterton	Cambs	N10206	
Bryceson	All Saints	Milton	Cambs	N12242	
Bryceson	St Augustine of Canterbury	Woodston	Cambs	N18720	
Bryceson/Bevington	St Peter	Wentworth	Cambs	N10227	
Bryceson Bros	Parish Church	Flint	Clwyd	SJ2472	
Bryceson	Baptist Church	Penzance	Cornwall	D05161	
Bryceson Bros & Ellis	St Michael and All Angels	Alphington	Devon	C00001	
Henry Bryceson	St Mary the Virgin	Diptford	Devon	T00878	
Bryceson Bros & Morten	St Mary	Molland	Devon	N12180	
Bryceson	St Edward	Plymouth	Devon	T00839	
Bryceson Bros	St Peter	Stoke Fleming	Devon	N10517	
Bryceson	Crichell Down Church	Crichell Down	Dorset	D03272	

Bryceson Bros & Ellis	Parish Church	Minnigraff	Dumfries	NX4166
Bryceson Bros & Ellis	Parish Church	Bradwell-on-Sea	Essex	TM0006
Bryceson	St Mary the Virgin	Broxted	Essex	N08658
Henry Bryceson	Holy Trinity Museum	Colchester	Essex	TM0025
Bryceson	Parish Church	Manningtree	Essex	H00605
Bryceson Bros	St Thomas	Navestock	Essex	D00010
Bryceson (?)	St Lawrence	Gloucester	Glos	N07683
Bryceson	St Mary	Norton	Glos	N05761
Bryceson Bros	St Lawrence	Sandhurst	Glos	D01552
Bryceson Bros	St Mary	Baddesley, South	Hants	N11321
Bryceson	St Peter	Bramshaw	Hants	D01074
Bryceson Bros	St Andrew	Farlington	Hants	N11370
Bryceson & Co.	St Barbara	Garrison Church	Hants	N18479
Bryceson	Hartley Institute	Southampton	Hants	N11621
Bryceson Bros	Minley Manor (electric action)	Farnborough	Hants	Ref 14
Bryceson	St Peter	Benington	Herts	D04932
Bryceson & Co.	St Peter	Berkhamsted	Herts	C00939
Bryceson	St Mary the Virgin	Westmill	Herts	N14175
Bryceson Son & Ellis	Methodist Church	Sandown	I of Wight	N09726
Henry Bryceson & Son	Countess of Huntingdon's Connection	Tunbridge Wells	Kent	D04953
Bryceson Bros	St James the Greater	Oaks in Charnwood	Leics	N01425
Henry Bryceson	St Peter and St Paul	Langton by Spilsby	Lincs	N14447
Bryceson	St Mary	Walesby	Lincs	D04336
Bryceson Bros & Ellis	Congregational Church	Addiscombe	Greater London	NH13517

Bryceson	Holy trinity	Barkingside	Greater London	N16738
Bryceson (?)	St Mark	Barnet Vale	Greater London	N14549
Bryceson Bros	St Mary the Virgin	East Bedfont	Greater London	N15927
Bryceson	Christ Church	Blackheath	Greater London	N16279
Bryceson	Holy Saviour	Croydon	Greater London	N13495
Bryceson Bros	Baptist Church	Finsbury Park	Greater London	N16851
Bryceson	St Alban	North Finchley	Greater London	N16040
Bryceson	Congregational Church	Highbury	Greater London	N16856
Bryceson Bros	Methodist Church	Kentish Town	Greater London	N17139
Bryceson Bros	St Peter	St Pancras	Greater London	N16483
Bryceson Bros	Baptist Church	Sudbury	Greater London	N15855
Bryceson Bros	St John the Baptist	Bressingham	Norfolk	N06169
Bryceson Bros	St Martin	Fincham	Norfolk	D00444
H. Bryceson	St Michael	Flordon	Norfolk	Ref
Bryceson & Co.	St Andrew	Ringstead	Norfolk	D02260
Bryceson Bros	St Michael	Ryston	Norfolk	N06596
Bryceson & Co.	All Saints	North Wooton	Norfolk	D02262
Henry Bryceson	All Saints	Lilbourne	North Hants	D02173
Bryceson/Bevington	St Lawrence	Marston St Lawrence	"	D01630
Bryceson Bros & Ellis	St Mary the Virgin	Warkworth	North Hants	D02262
Henry Bryceson	St Luke	Hickling	Notts	N01764
Bryceson (?)	St Mary the Virgin	Adderbury	Oxon	D04955
Bryceson Bros	St Michael	Aston Tirrold	Oxon	N01025

H. Bryceson	St Giles	Hampton Gay	Oxon	D01146
Bryceson	St Matthew	Harwell	Oxon	T00300
Bryceson Bros & Ellis	St Barnabas	Horton-cum-Studley	"	D02465
Bryceson Bros	St Simon and St Jude	Milton under Wychwood	Oxon	D06017
Henry Bryceson	St Edith	Church Pulverbatch	Shrops	N04716
Bryceson & Co.	St Mary	Lyneal	Shrops	N04782
Henry Bryceson	St Edith	Pulverbatch	Shrops	D04562
Bryceson Bros & Morten	St James	Ashwick	Somerset	A00321
Henry Bryceson	St Peter and St Paul	Over Stowey	Somerset	N12313
Bryceson & Co.	St Peter	North Wooton	Somerset	D02050
Bryceson Bros & Ellis	St Mary	Flixton	Suffolk	A01063
Bryceson	St Mary	Harkstead	Suffolk	D00257
Bryceson Bros Ltd	St Mary and All Saints	Ockham	Surrey	N13842
Bryceson Bros	St Mary the Virgin	Staines	Surrey	D02472
Bryceson Bros	St John the Baptist	Woking	Surrey	N13976
Bryceson & Son	St Mary the Virgin	Worplesdon	Surrey	N13990
Bryceson Bros	St John the Baptist	Tidebrook	Sussex	N15274
Bryceson (?)	St Mary Magdalene	South Bersted	Sussex	N15575
Bryceson	Thomas Smith Chapel	Bognor Regis	Sussex	N15581
H. Bryceson	St Mary	West Chiltington	Sussex	N15358
Bryceson Bros & Morten	St Mary	Sullington	Sussex	N15267
Bryceson Bros	Christ Church	Worthing	Sussex	N16997
Bryceson	Parish Church	Compton Wyngates	Warks	N05851
Bryceson	St Mary	Pillerton Hersey	Warks	N05889
Bryceson	St Cyprian	Hay Mills	West Midlands	N07321

Bryceson Bros	St Giles	Alderton	Wilts	N08169
Bryceson (?)	Methodist Church	Bradford-on Avon	Wilts	D07443
Bryceson & Co.	St Leonard	Broad Blunsden	Wilts	D01339
Bryceson Bros	Assumption of the Blessed Virgin Mary	Chippenham	Wilts	N10291
Bryceson Bros & Morten	Congregational Church	Chippenham	Wilts	N10288
Bryceson & Co.	St John	Upper Studley	Wilts	A00216
Bryceson (?)	Parish church	Bilton	Yorks	N04820
Bryceson & Co.	St James	Clapham	Yorks	N04834
Bryceson Bros	St Agatha	Easby	Yorks	N02975
Bryceson & Co.	St James the Great	Melsonby	Yorks	N12040
Bryceson & Co.	St John	Lepton	Yorks	N06045

